ECE 563 – Information Theory
Lecture 01

Lav R. Varshney

28 August 2018

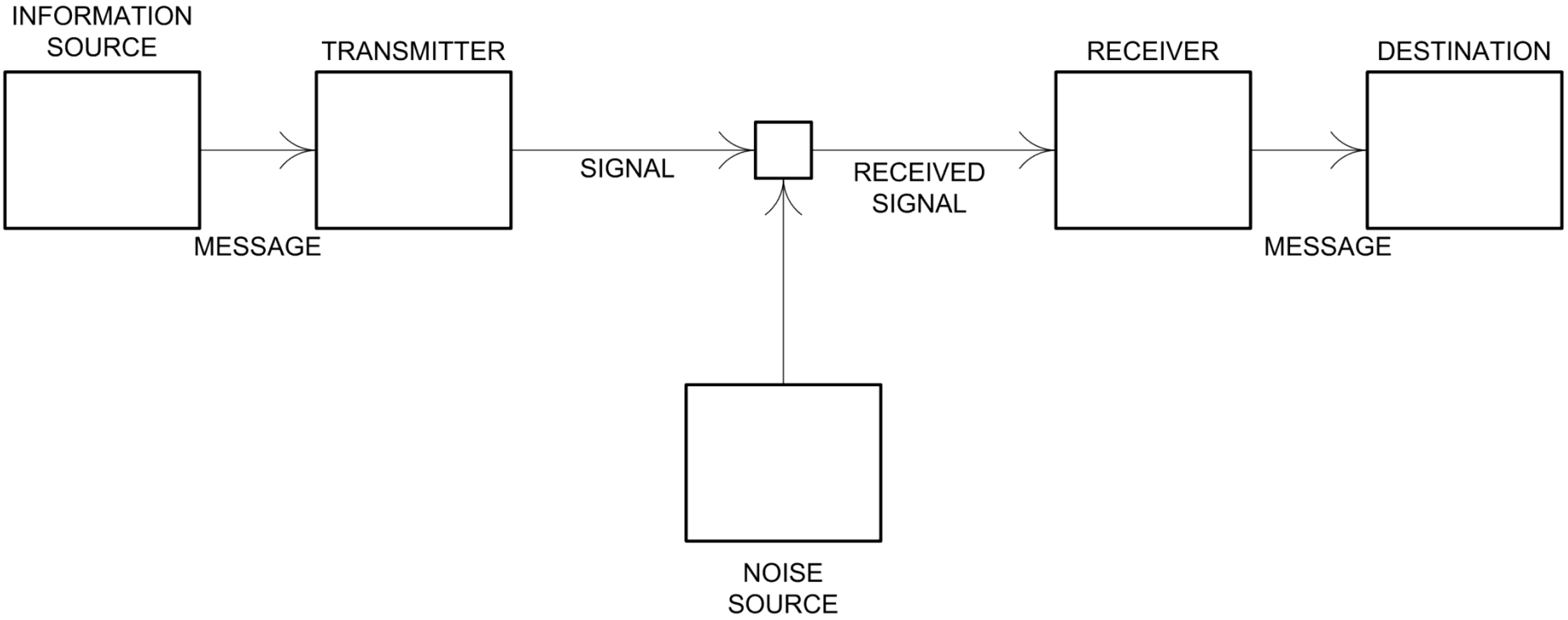

Claude Shannon's schematic diagram of a general communication system (1948: Figure 1)

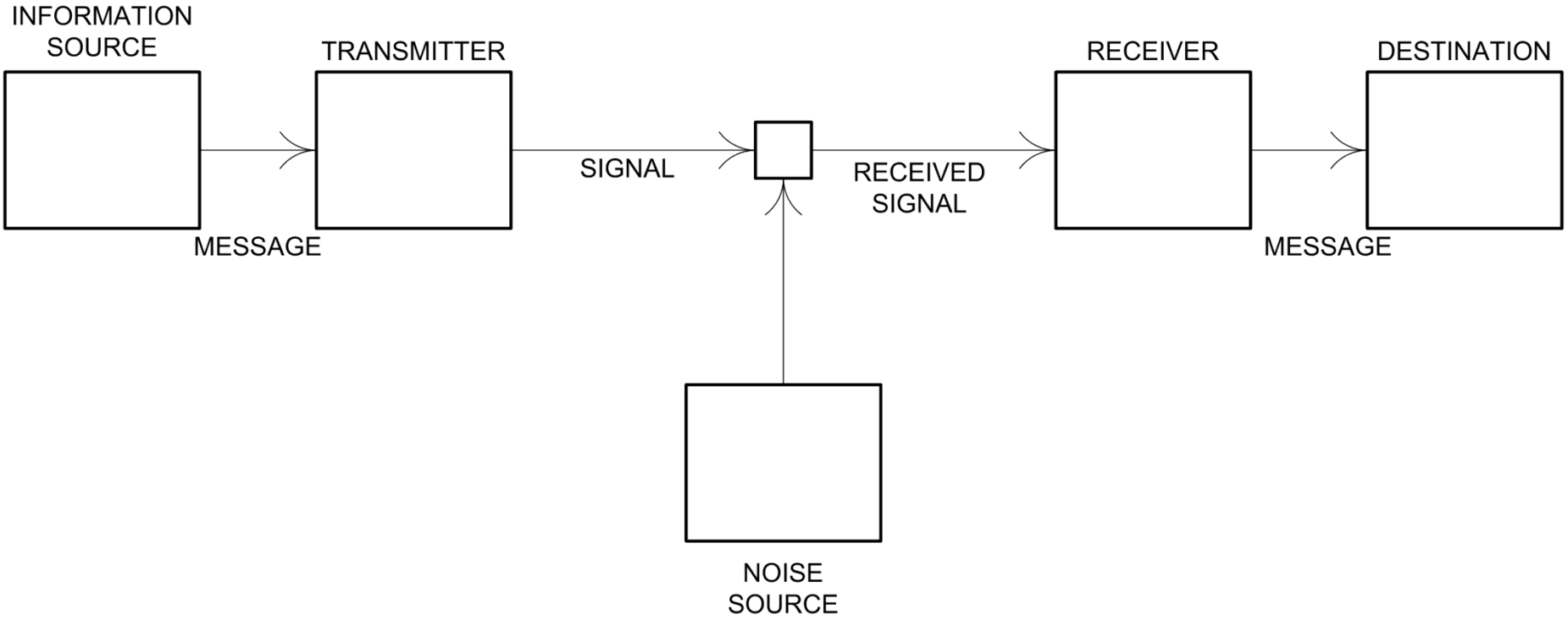

Claude Shannon's schematic diagram of a general communication system (1948: Figure 1)

The fundamental problem of communication is that of reproducing at one point either exactly or approximately a message selected at another point.

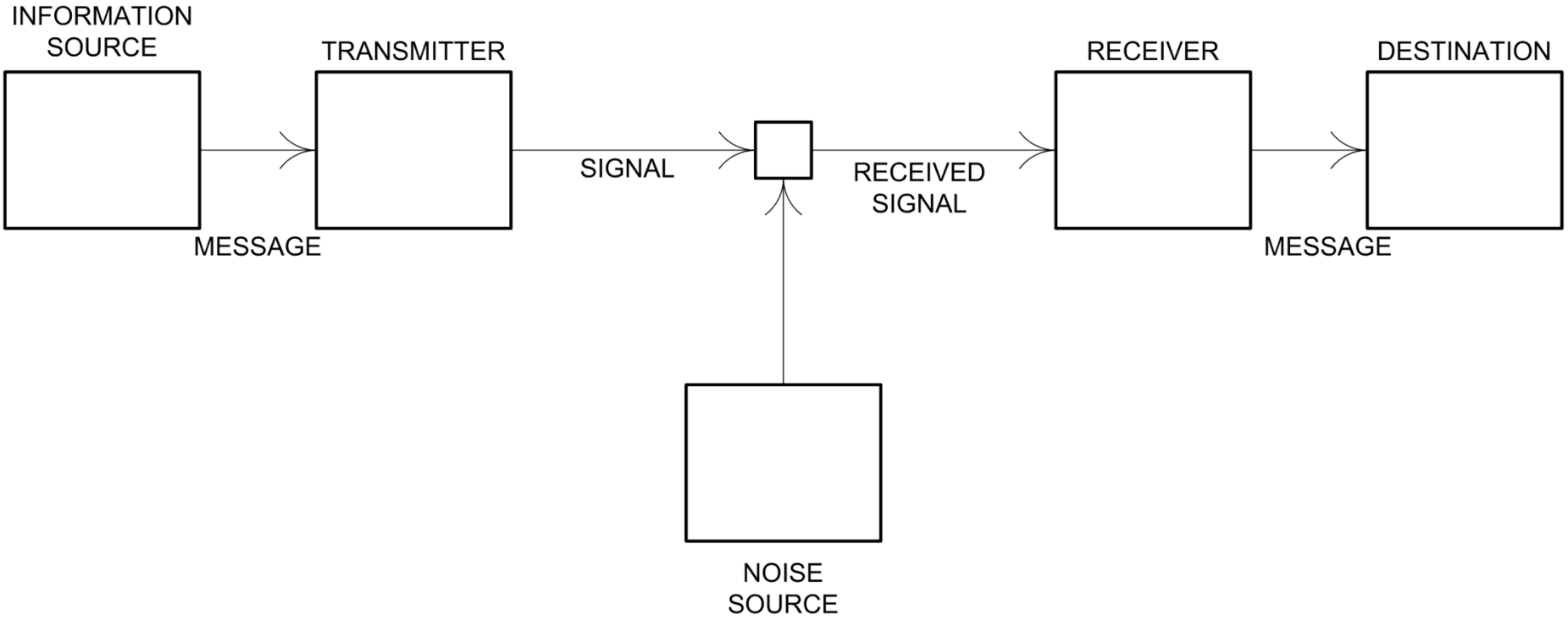

Claude Shannon's schematic diagram of a general communication system (1948: Figure 1)

The fundamental problem of communication is that of reproducing at one point either exactly or approximately a message **selected** at another point.

Big idea #1:

Communication is a statistical problem

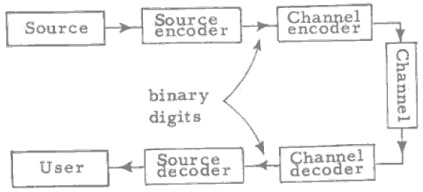

(a)

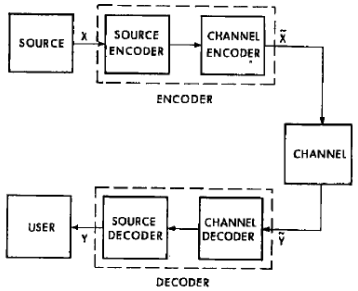

(c)

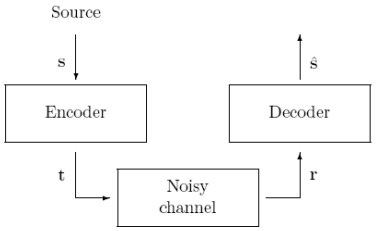

(e)

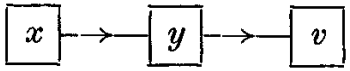

(g)

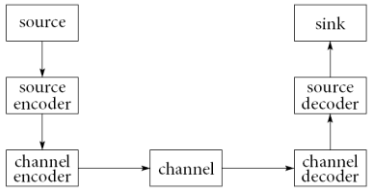

(i)

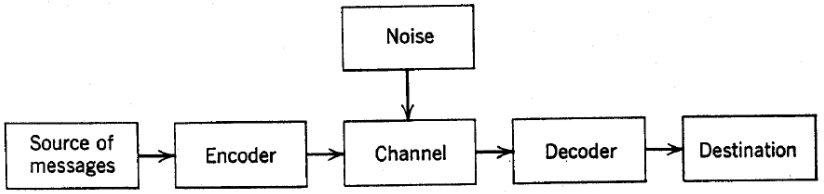

(b)

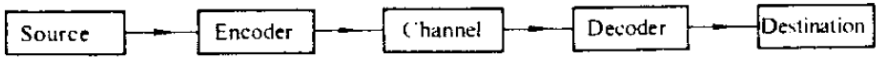

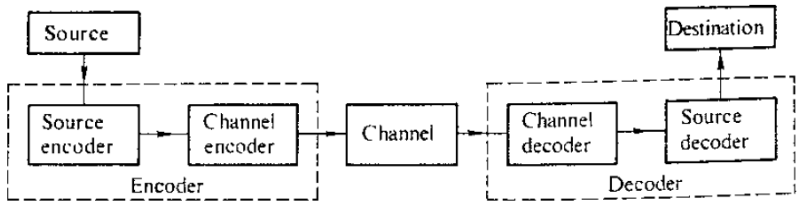

(d)

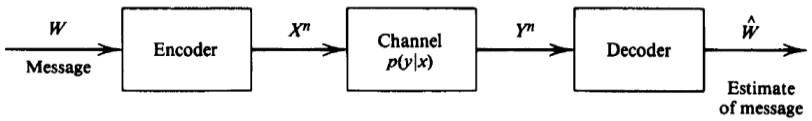

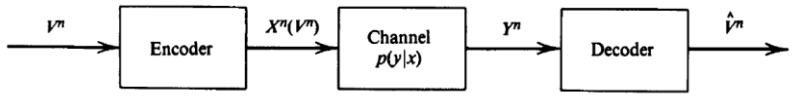

(f)

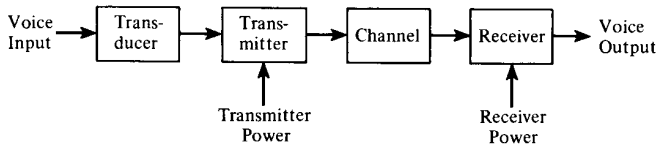

(h)

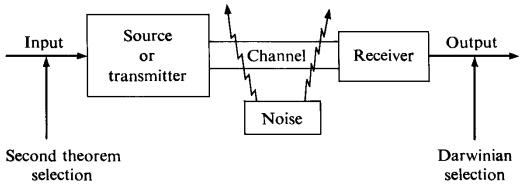

(j)

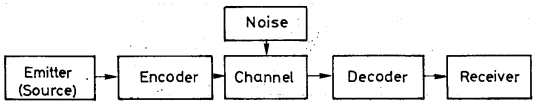

(k)

Various incarnations of Shannon's schematic for a general communication system in textbooks.

(a) Fano (1961: Figure 1.1). (b) Ash (1965: Figure 1.1.1). (c) Berger (1971: Figure 1.2.1). (d) two figures from Csiszár and Körner (1997: Figures 2.1 and 2.2). (e) MacKay (2003: Figure 1.6). (f) two figures from Cover and Thomas (1991: Figures 8.1 and 8.12). (g) Woodward (1953: 58). (h) Hancock (1972: Figure 1.1). (i) Richardson and Urbanke (2008: Figure 1.2). (j) Gatlin (1972: Figure 17). (k) Rényi (1984: 43).

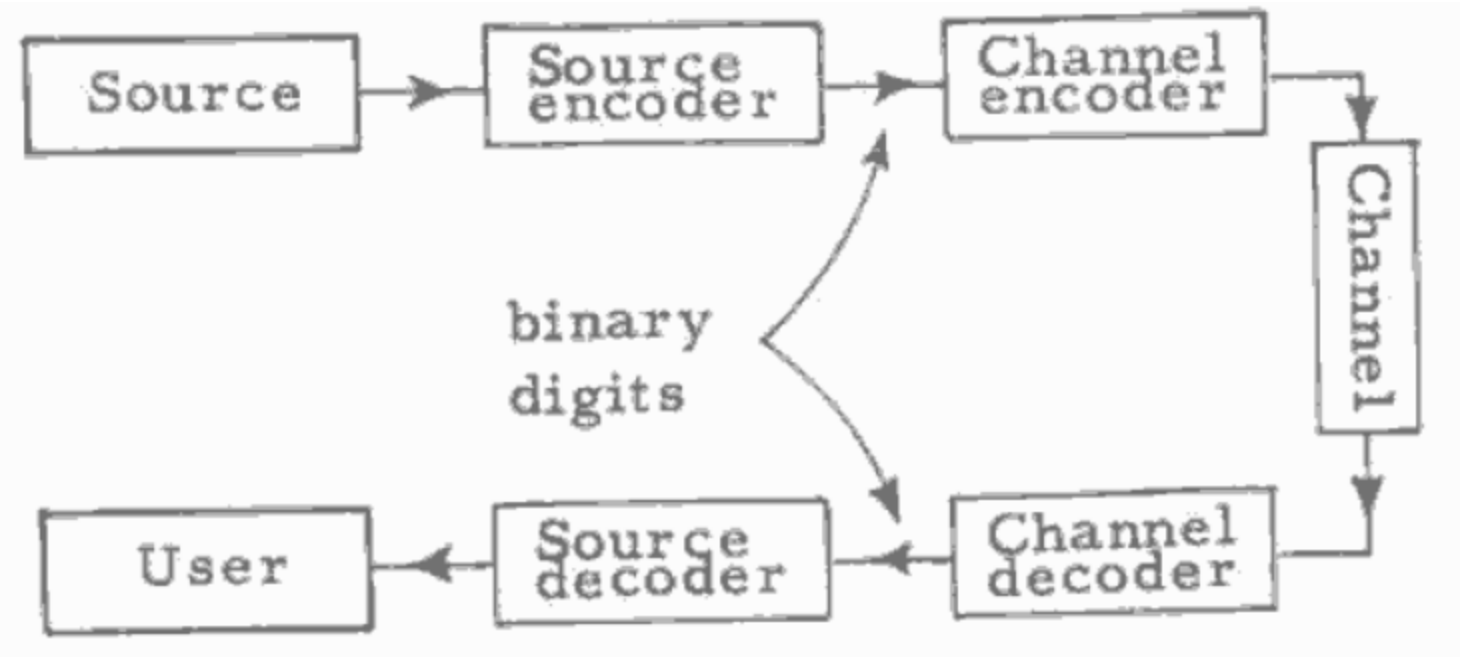

[Fano, *Transmission of Information*, 1961.]

before we had the theory,… we had been dealing with a commodity that we could never see or really define. We were in the situation petroleum engineers would be in if they didn't have a measuring unit like the gallon. We had intuitive feelings about these matters, but we didn't have a clear understanding

– Jerome Wiesner (1953)

Certain Factors Affecting Telegraph Speed[1]

By H. NYQUIST

Theoretical Possibilities Using Codes with Different Numbers of Current Values

The speed at which intelligence can be transmitted over a telegraph circuit with a given line speed, *i.e.*, a given rate of sending of signal elements, may be determined approximately by the following formula, the derivation of which is given in Appendix B.

$$W = K \log m$$

Where W is the speed of transmission of intelligence,
m is the number of current values,
and, K is a constant.

[H. Nyquist, "Certain Factors Affecting Telegraph Speed," *Bell System Technical Journal*, 1924.]

- If the following messages are equally likely, how many bits are being produced?

1. {01101, 11101}
2. {1, 0}
3. {Ẇ, Ẋ}
4. {3333333333, 4444444}
5. {01, 10, 11, 00}
6. {000, 111, 110, 101}

Big idea #2:

There is a notion of information rate, which can be measured in bits

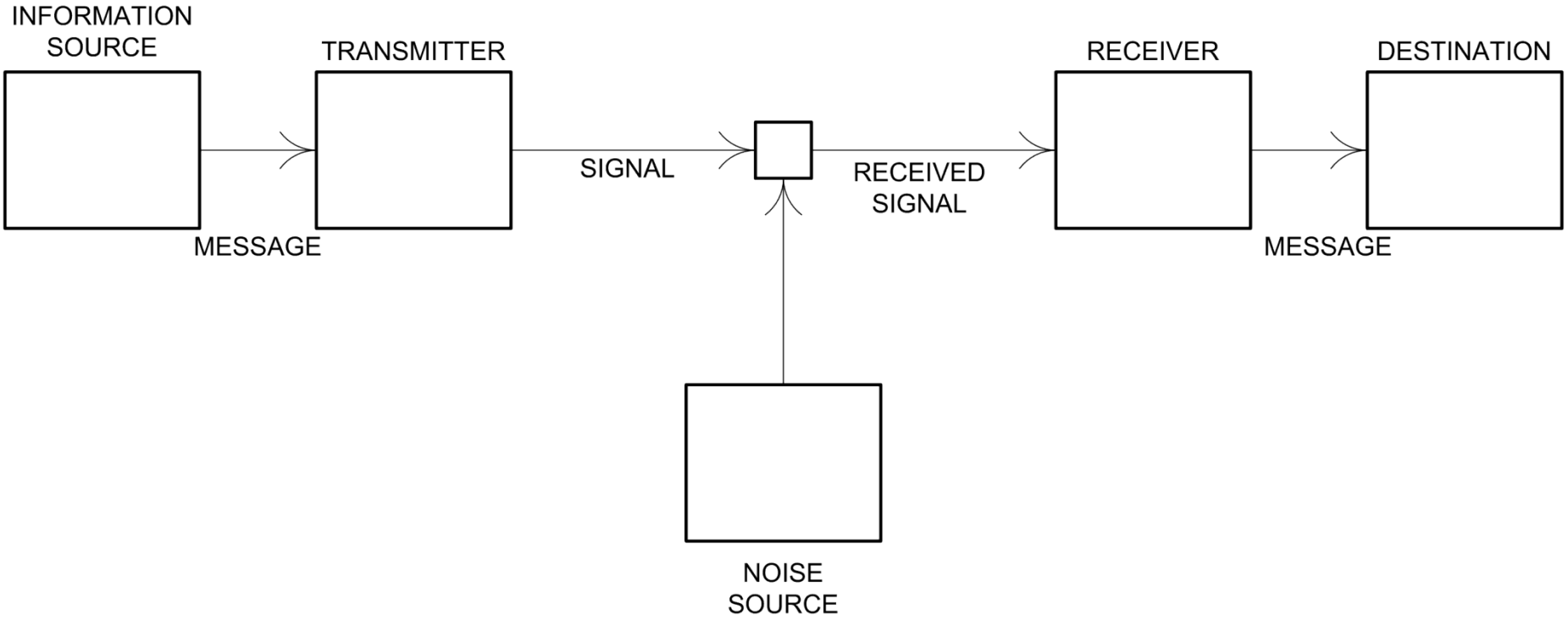

Claude Shannon's schematic diagram of a general communication system (1948: Figure 1)

Why is information theory not just applied probability?
What is different from detection and estimation?

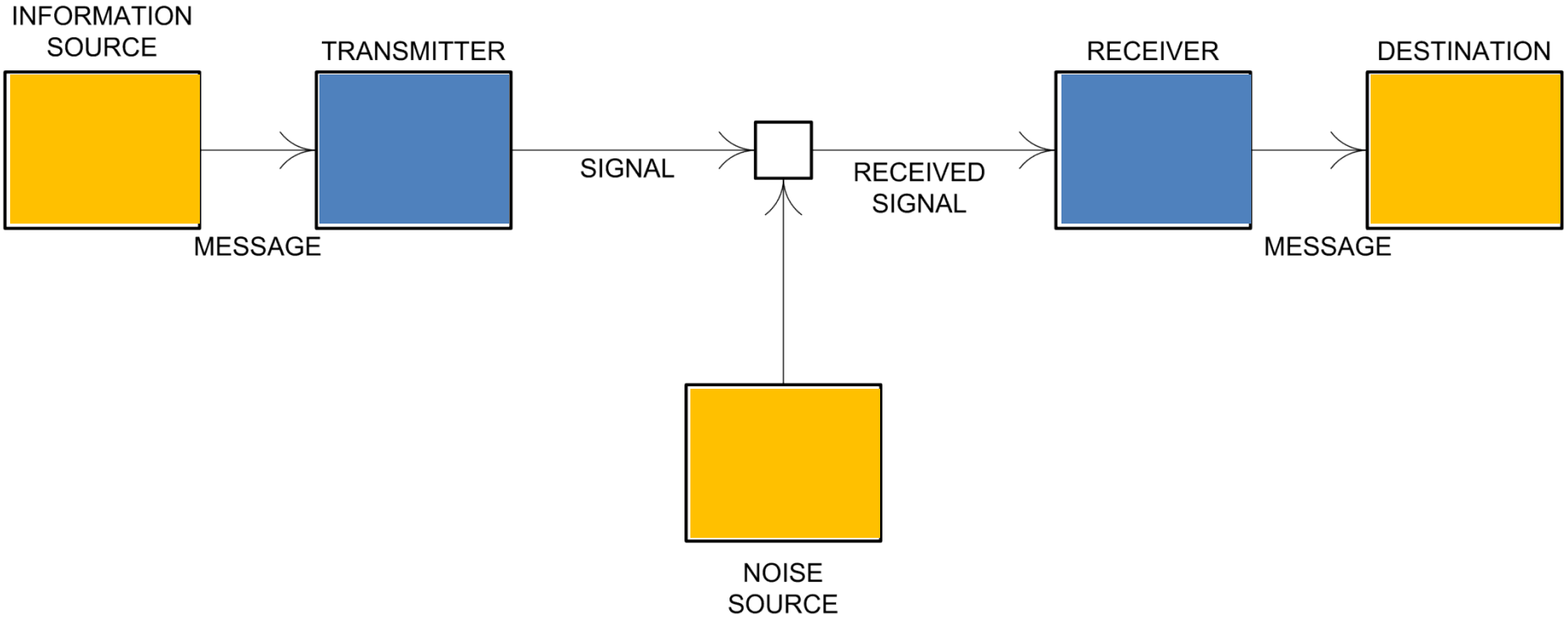

Generally thought of as given by nature

Generally up to the design of the engineer

- What is the best that one can do?
- How much can coding help?

Big idea #3:

Coding

https://www.youtube.com/watch?v=pHSRHi17RKM

https://www.youtube.com/watch?v=8j0_8PCWASE

30 April 1916

Proposed National Highways for Michigan, 1916, NHA \ Micigan Institute for Data Science, U. Michigan

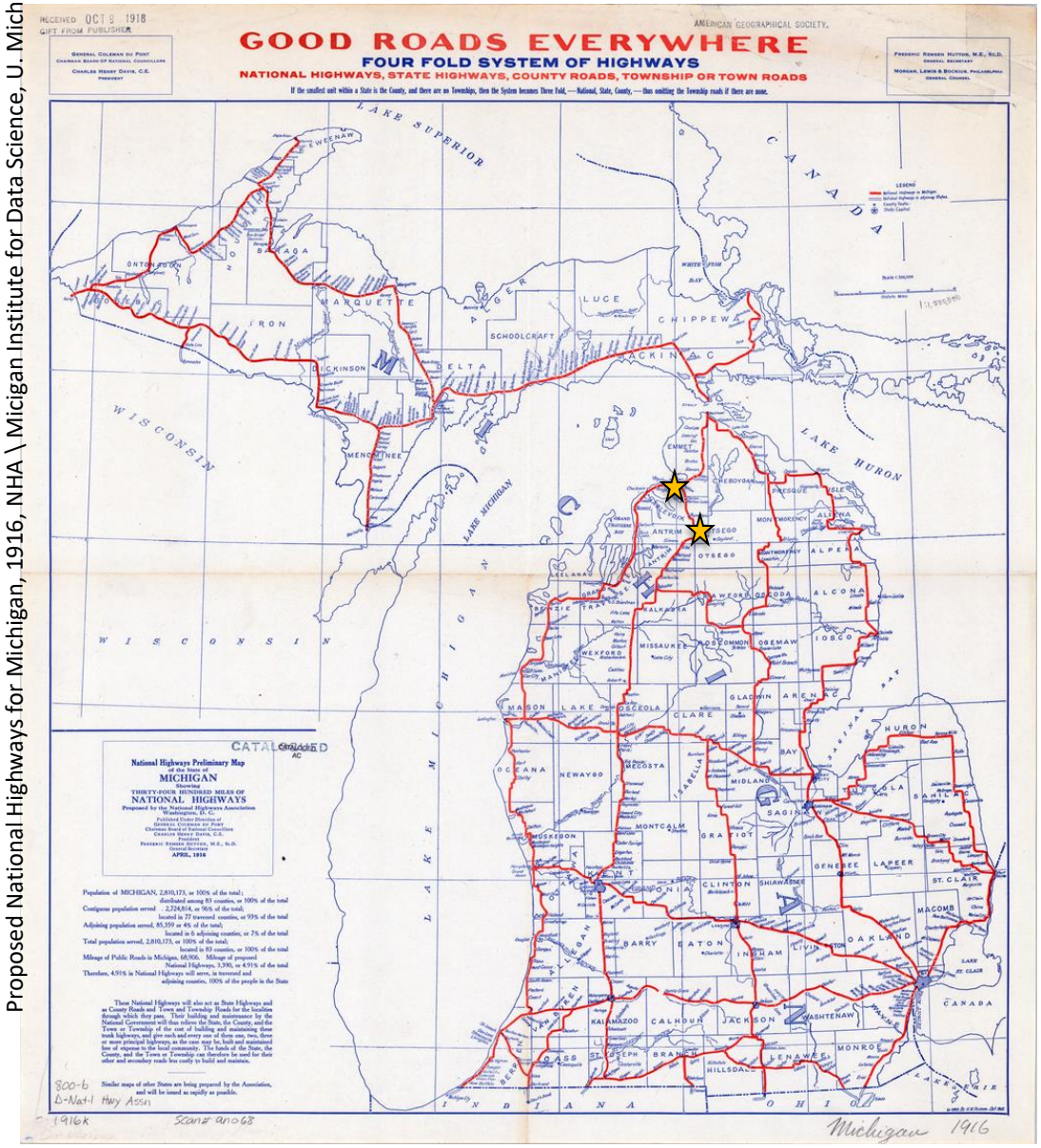

Analog Computing

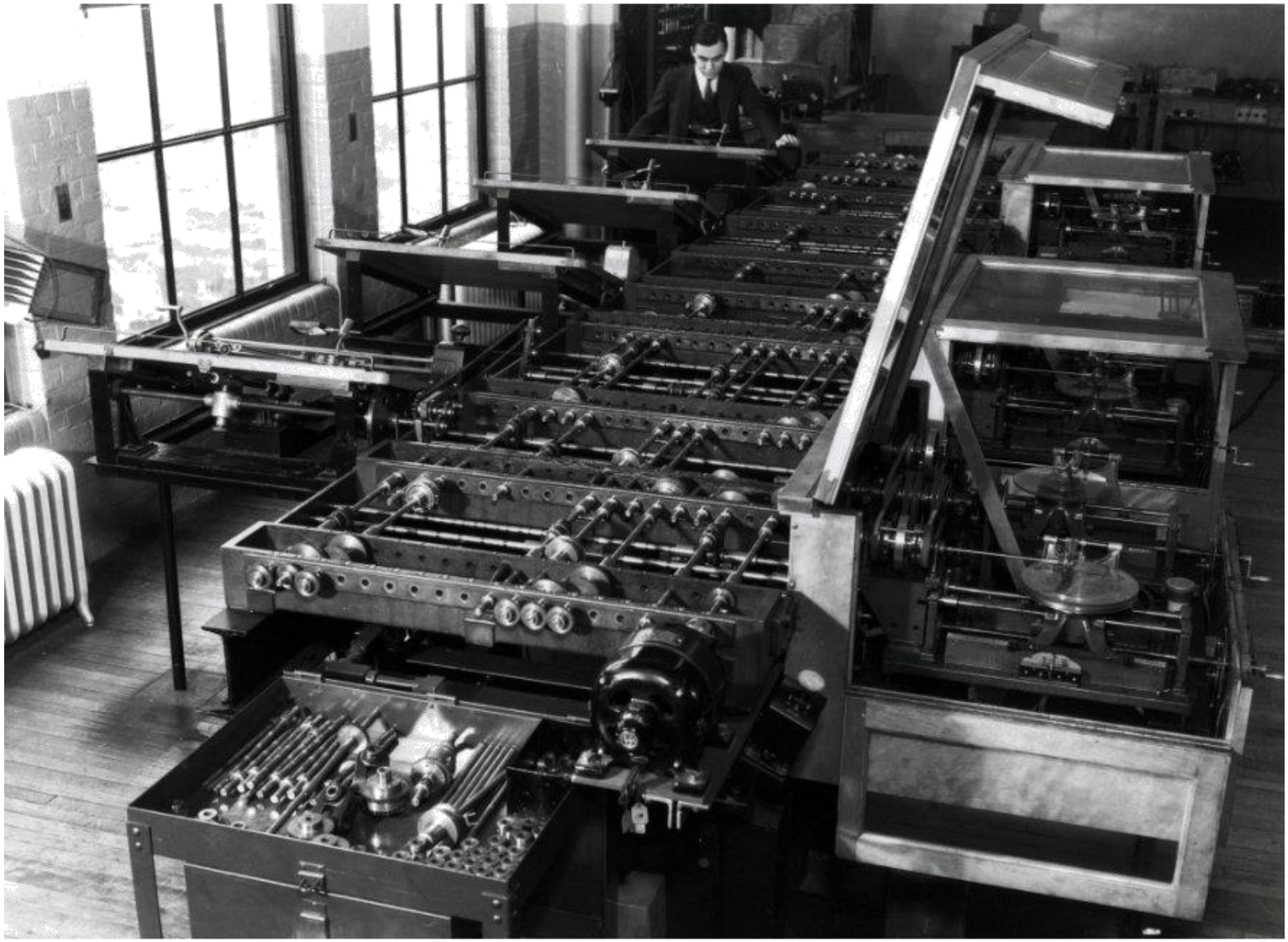

Vannevar Bush's differential analyzer, ca. 1930, Computer History Museum, 102618648

Digital Computing

A SYMBOLIC ANALYSIS

OF

RELAY AND SWITCHING CIRCUITS

by

Claude Elwood Shannon

B.S., University of Michigan

1936

Submitted in Partial Fulfillment of the

Requirements for the Degree of

MASTER OF SCIENCE

from the

Massachusetts Institute of Technology

1940

(1939)

Norma Barzman, *The Red and the Blacklist: The Intimate Memoir of a Hollywood Expatriate*, Nation Books, 2003.

Secrecy

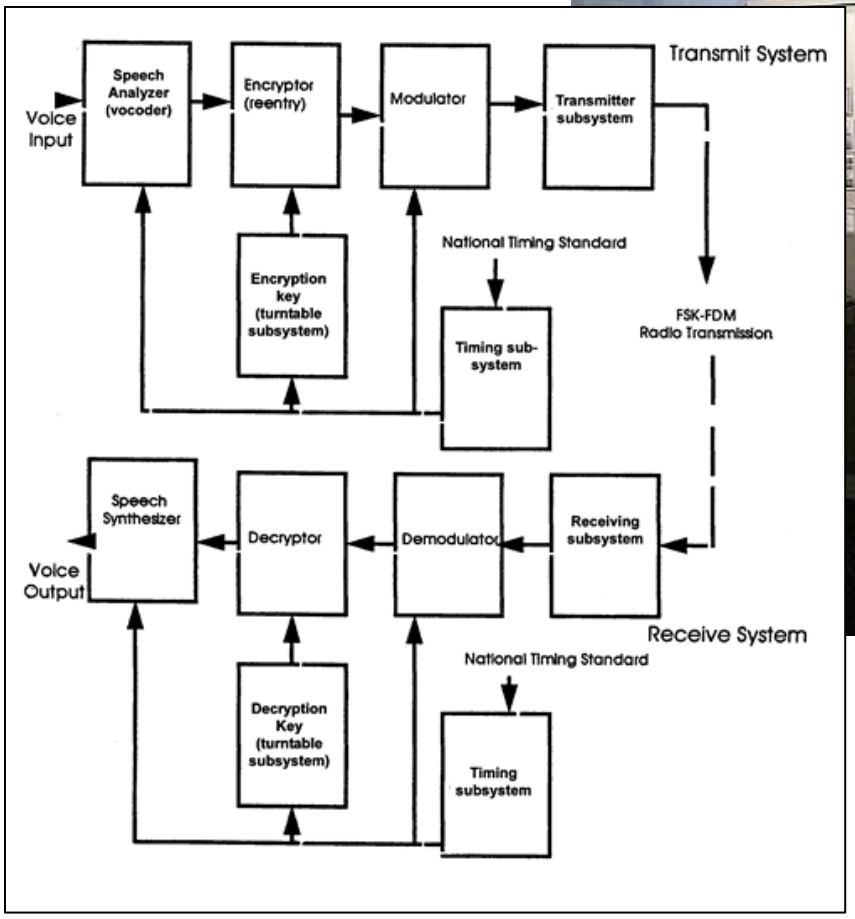

J. V. Boone and R. R. Peterson, *The Start of the Digital Revolution: SIGSALY Secure: Digital Voice Communications in World War II*

Communication

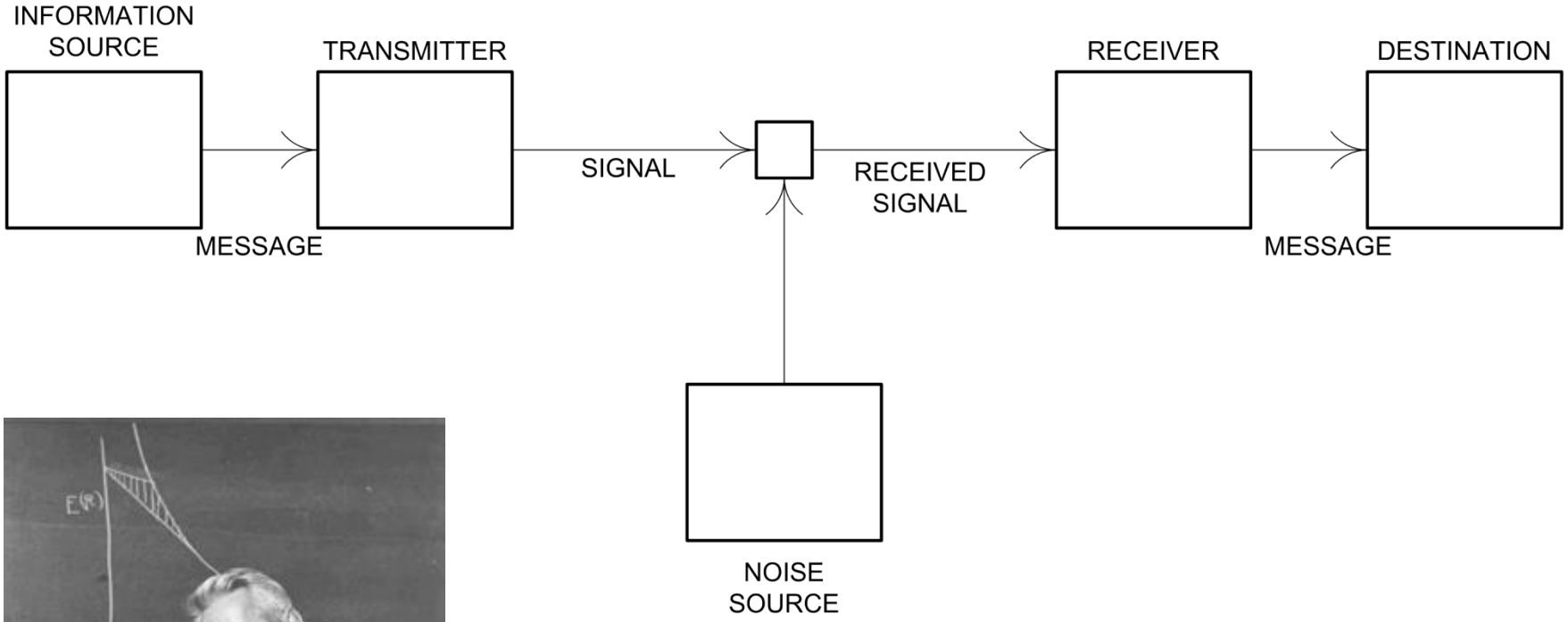

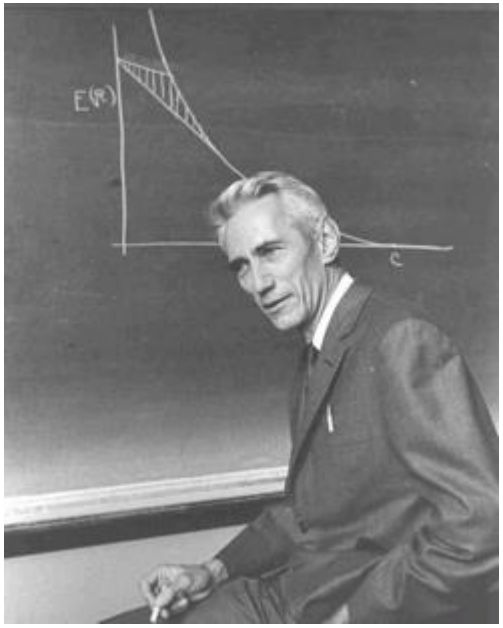

Circuit Complexity

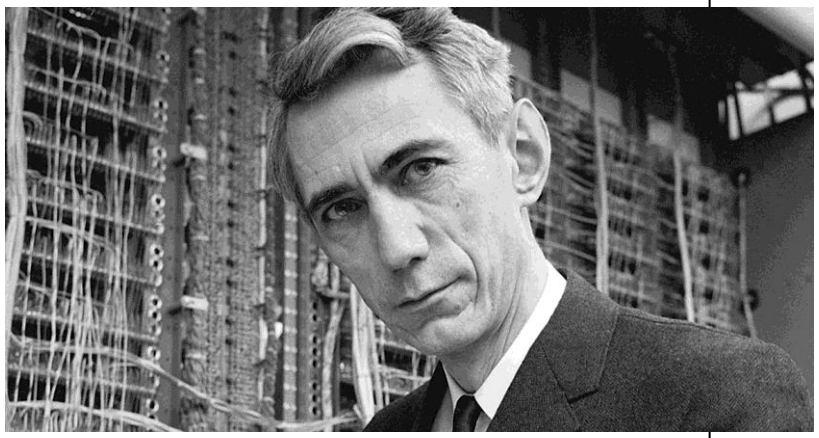

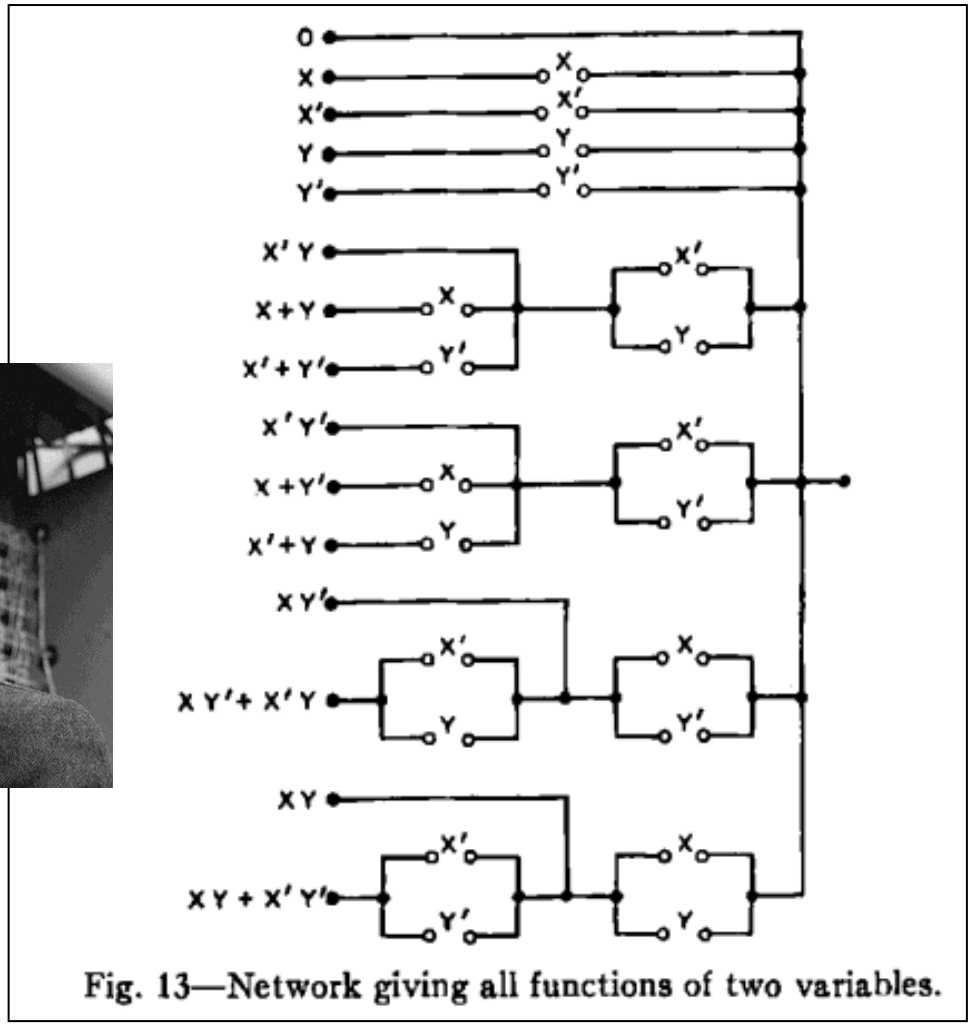

Fig. 13—Network giving all functions of two variables.

Artificial Intelligence

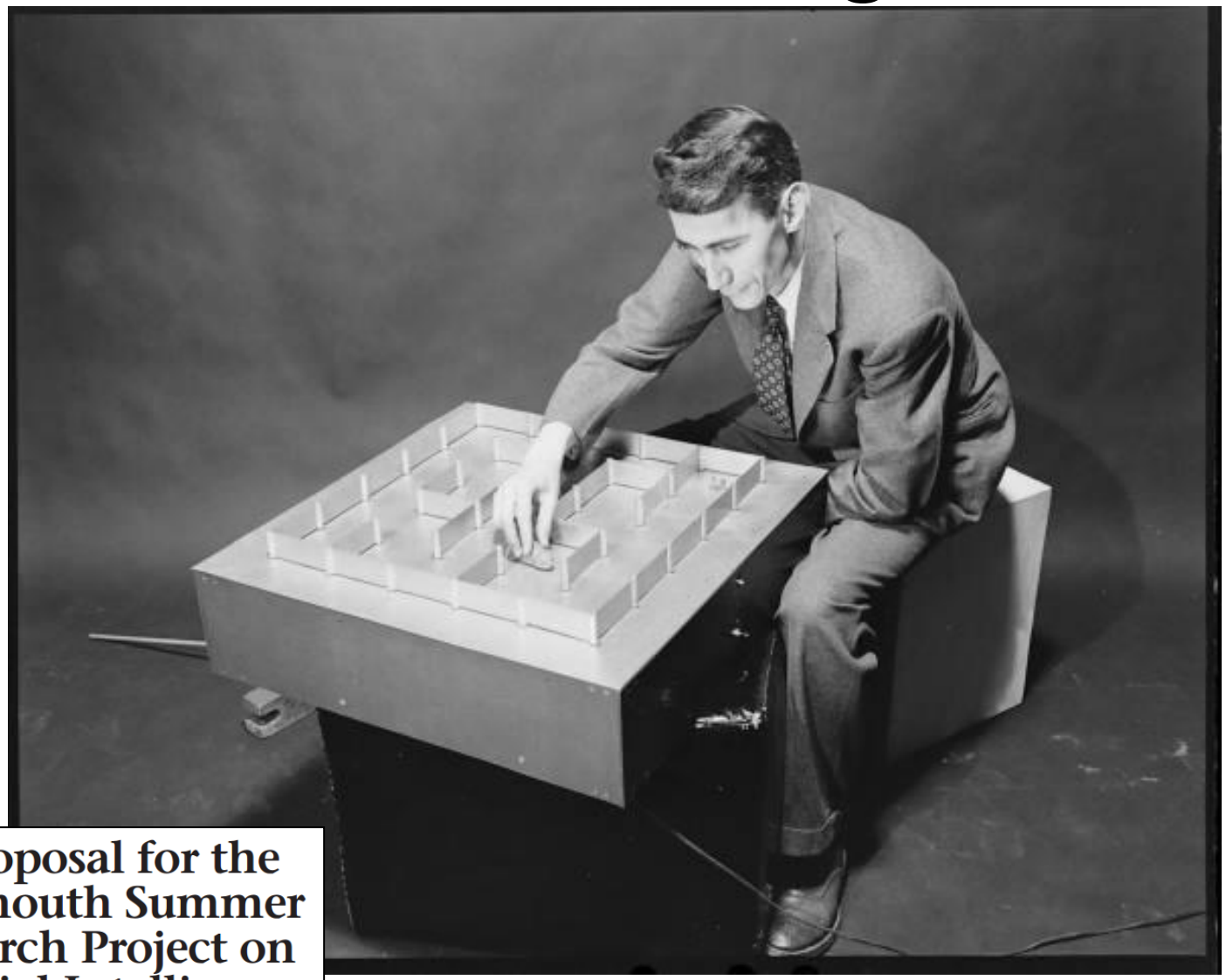

A Proposal for the Dartmouth Summer Research Project on Artificial Intelligence

August 31, 1955

Tricks for formulating/solving problems (principles of theoretical research)

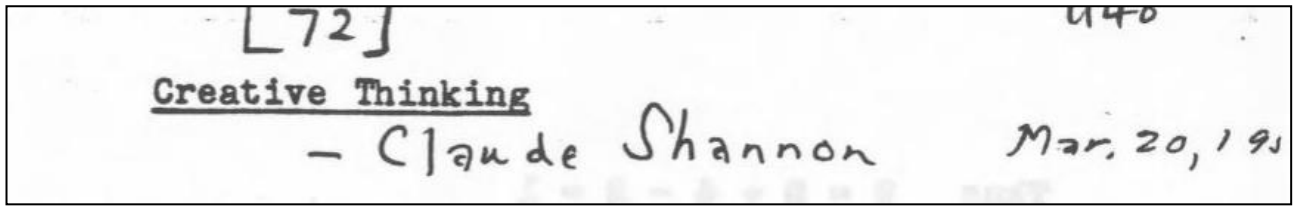
[72]

Creative Thinking

– Claude Shannon Mar. 20, 19

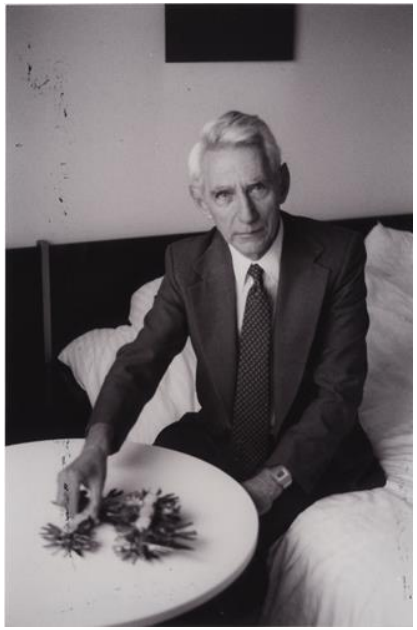

1. Simplification: get rid of enough detail (including practical aspects) for intuitive understanding
2. Similarity to a known problem (experience helps)
3. Reformulate (avoid getting in a rut)
4. Generalize (more than opposite of simplify)
5. Structural analysis (break problem into pieces)
6. Inversion (work back from desired result)

Shannon a la Gallager

- Shannon was almost opposite of applied mathematicians
  - Applied mathematicians solve mathematical models formulated by others (perhaps with minor changes to suit their tools)
- Shannon was a creator of models — his genius lay in determining the core of the problem and removing details that could be reinserted later

- Shannon was interested in several problems at all times
- Shannon studied what was happening in multiple fields, but didn't work on what many others were working on
- Shannon asked conceptual questions about everyday things

Defining a Closed Deductive System

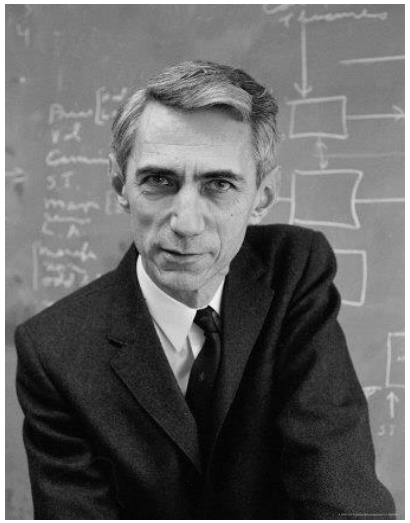

Shannon capacity

"Frequently the messages have meaning; that is they refer to or are correlated according to some system with certain physical or conceptual entities. These semantic aspects of communication are irrelevant to the engineering problem."

- Claude E. Shannon (1948)

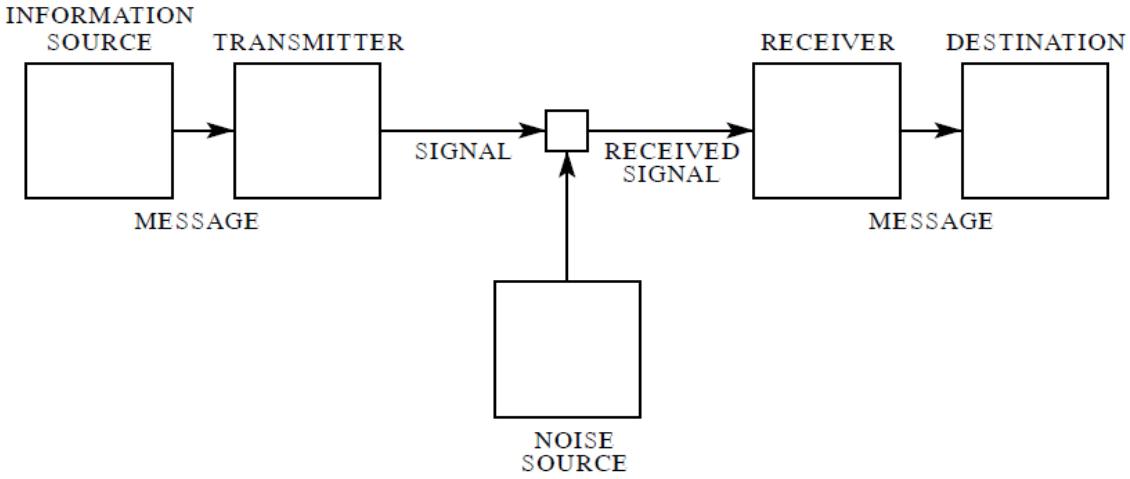

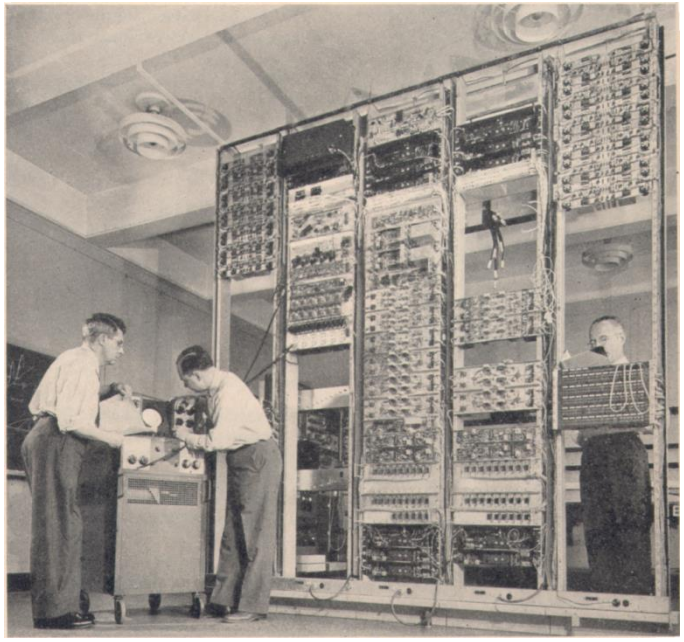

Modeling

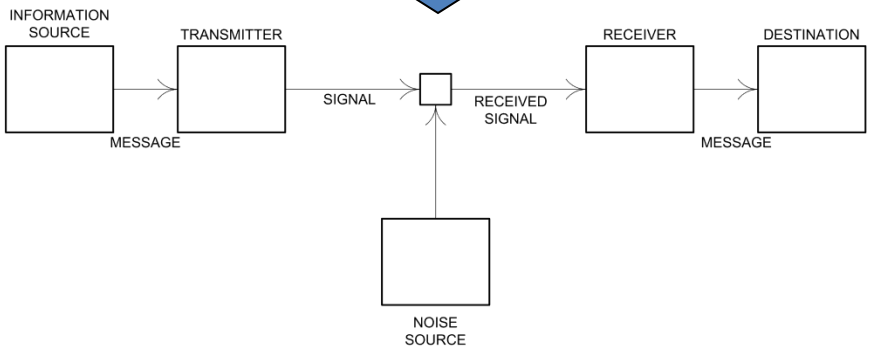

Physical

black-boxing

Modeling

abstract (or ignore) some physical costs and uncertainties

Informational

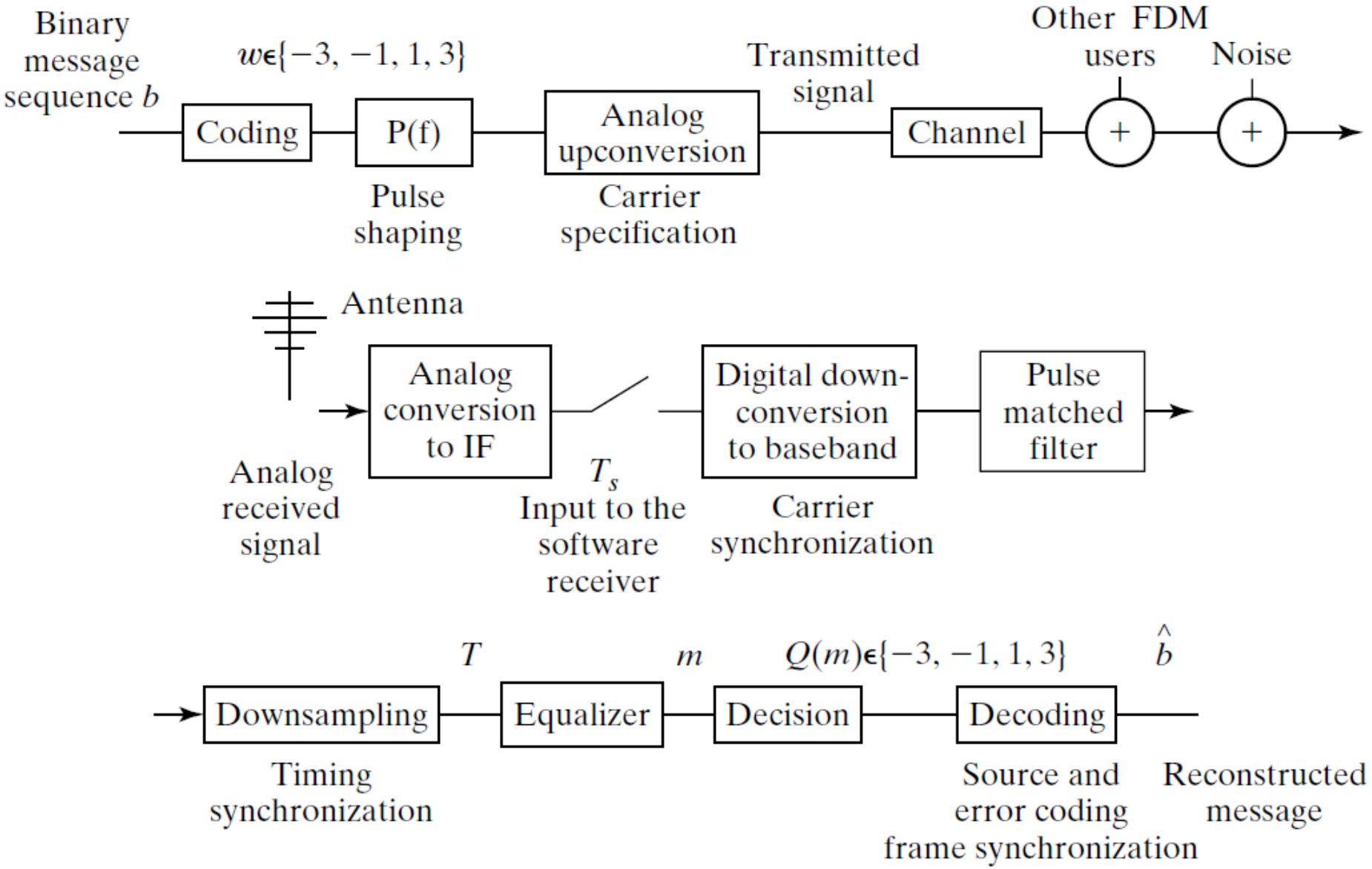

[Johnson and Sethares, *Telecommunication Breakdown: Concepts of Communication Transmitted via Software-Defined Radio*, 2003.]

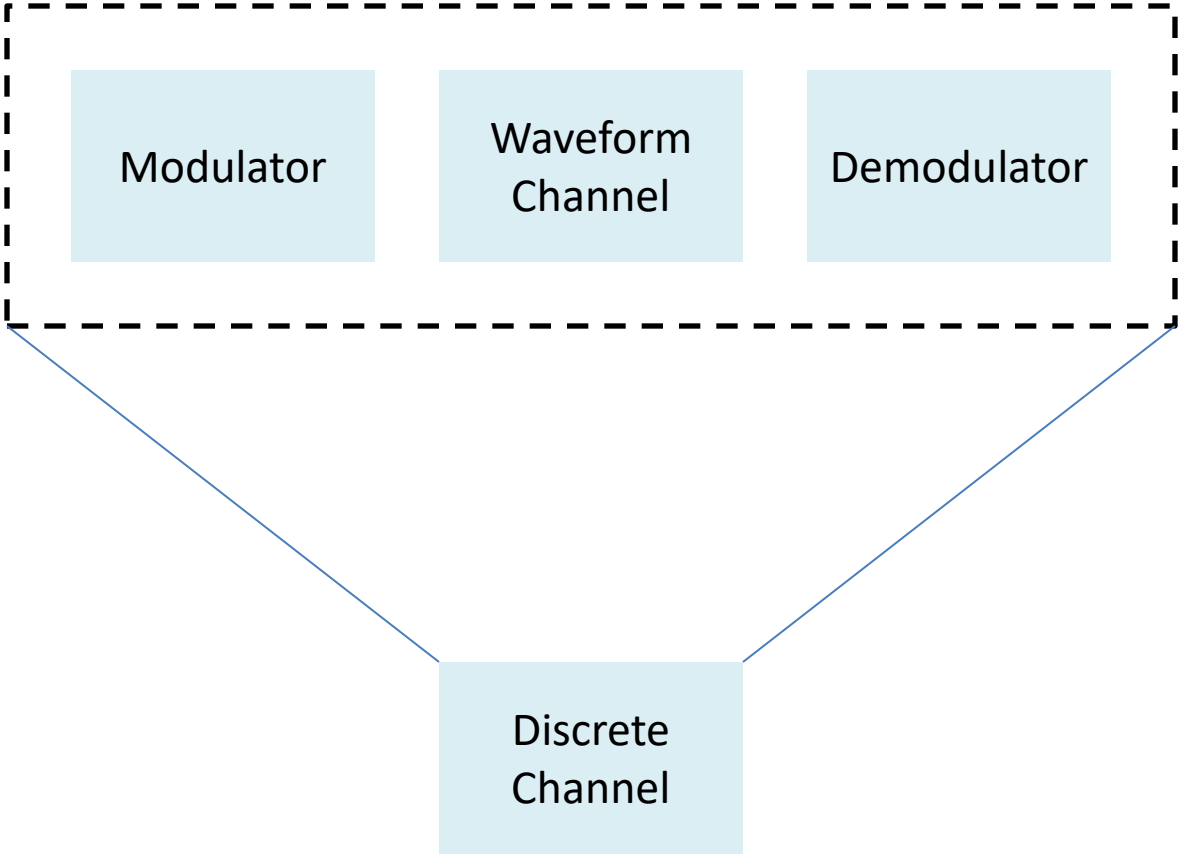
Modulator
Waveform Channel
Demodulator
Discrete Channel

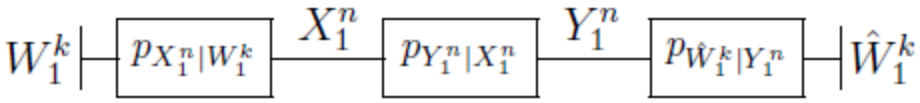

Figure 2-1. Factor graph of communication system with message decoding.

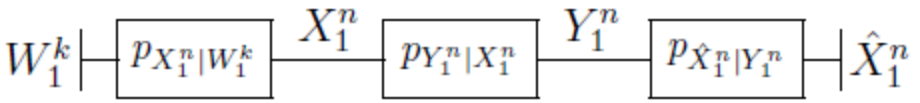

Figure 2-2. Factor graph of communication system with signal decoding.

(Block diagrams can actually be a formal mathematical notation, e.g. through the use of Forney-style factor graphs.)

http://courses.engr.illinois.edu/ece563/

Syllabus

- Noisy twenty questions

Homework 0

- (a) Why are you taking the course?
- (b) What do you want to achieve in the course?
- (c) What, specifically, do you want to improve on through the course?
- (d) What do you hope success in the course will help you achieve in the future?
- (e) What is your favorite information system, and why?

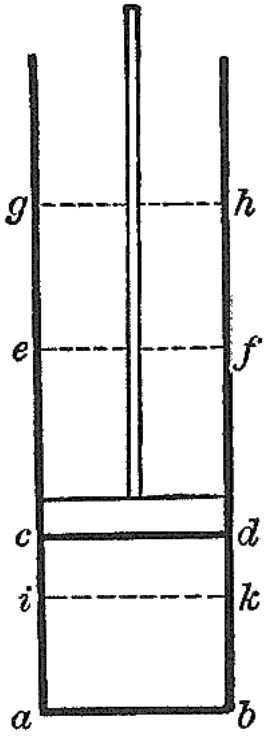

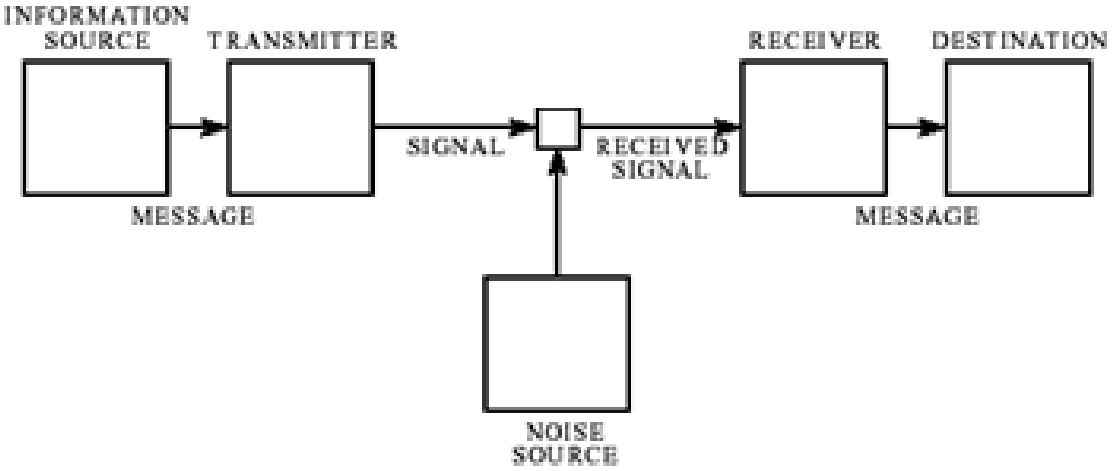

Fig. 1 — Schematic diagram of a general communication system.

Shannon established fundamental limits of communication in the presence of noise

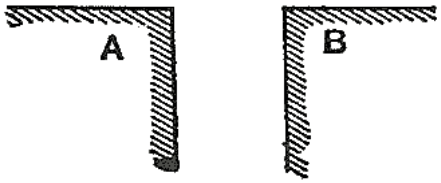

Carnot established fundamental limits on efficiency of engines

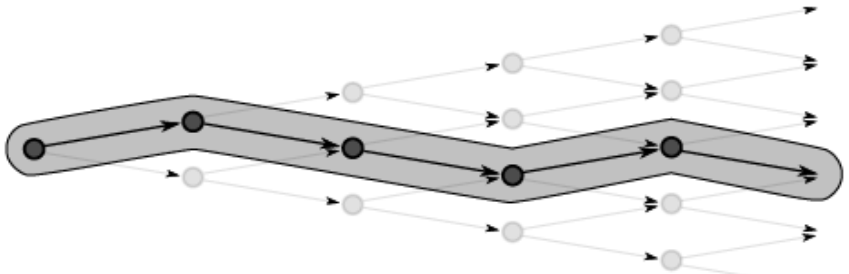

Karaman and Frazzoli established a fundamental speed limit of flight in forests without crashing

"Shannon himself told me that he believes the most promising new developments in information theory will come from work on very complex machines, especially from research into artificial intelligence." [J. Campbell, *Grammatical Man,* 1982]

[L. R. Varshney, "Review of *A Mind at Play*," to appear in *Issues in Science and Technology,* 2018.]

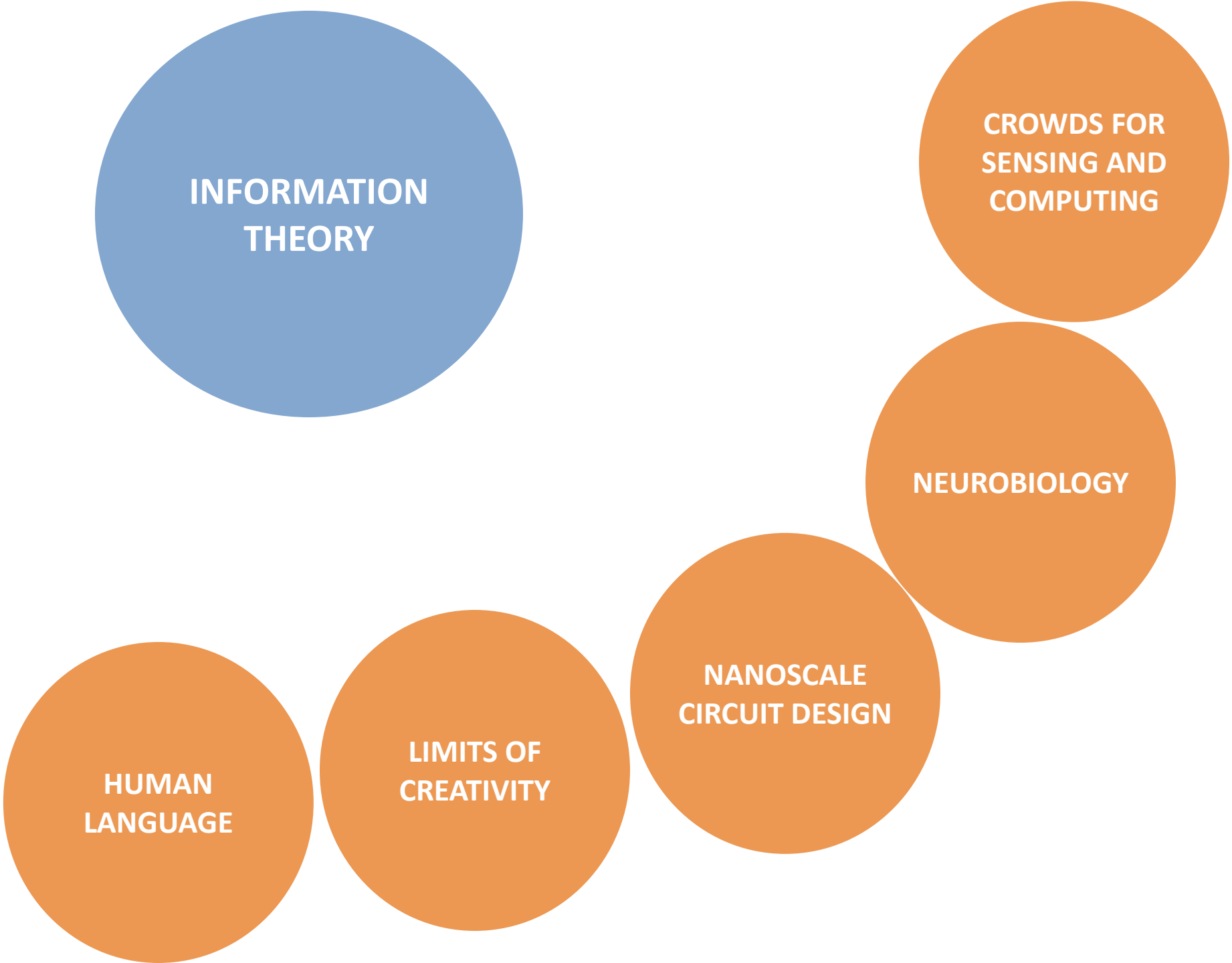
INFORMATION THEORY
CROWDS FOR SENSING AND COMPUTING
NEUROBIOLOGY
NANOSCALE CIRCUIT DESIGN
LIMITS OF CREATIVITY
HUMAN LANGUAGE

Information Flow in *C. elegans*

Nodes are neurons and edges are synapses, both electrical gap junctions and electrochemical synapses

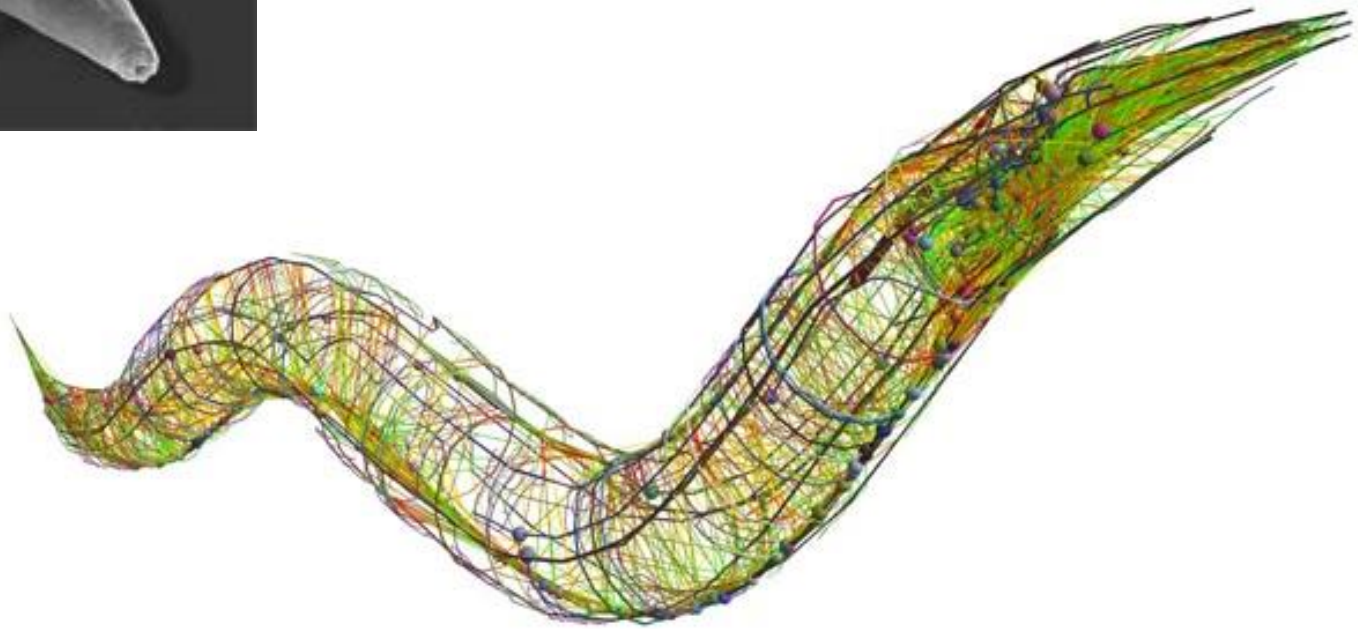

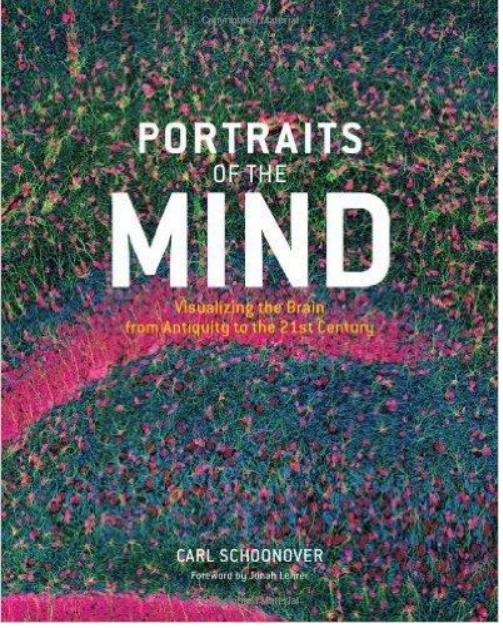

There are 302 nodes, 6393 chemical synapses, and 890 gap junctions

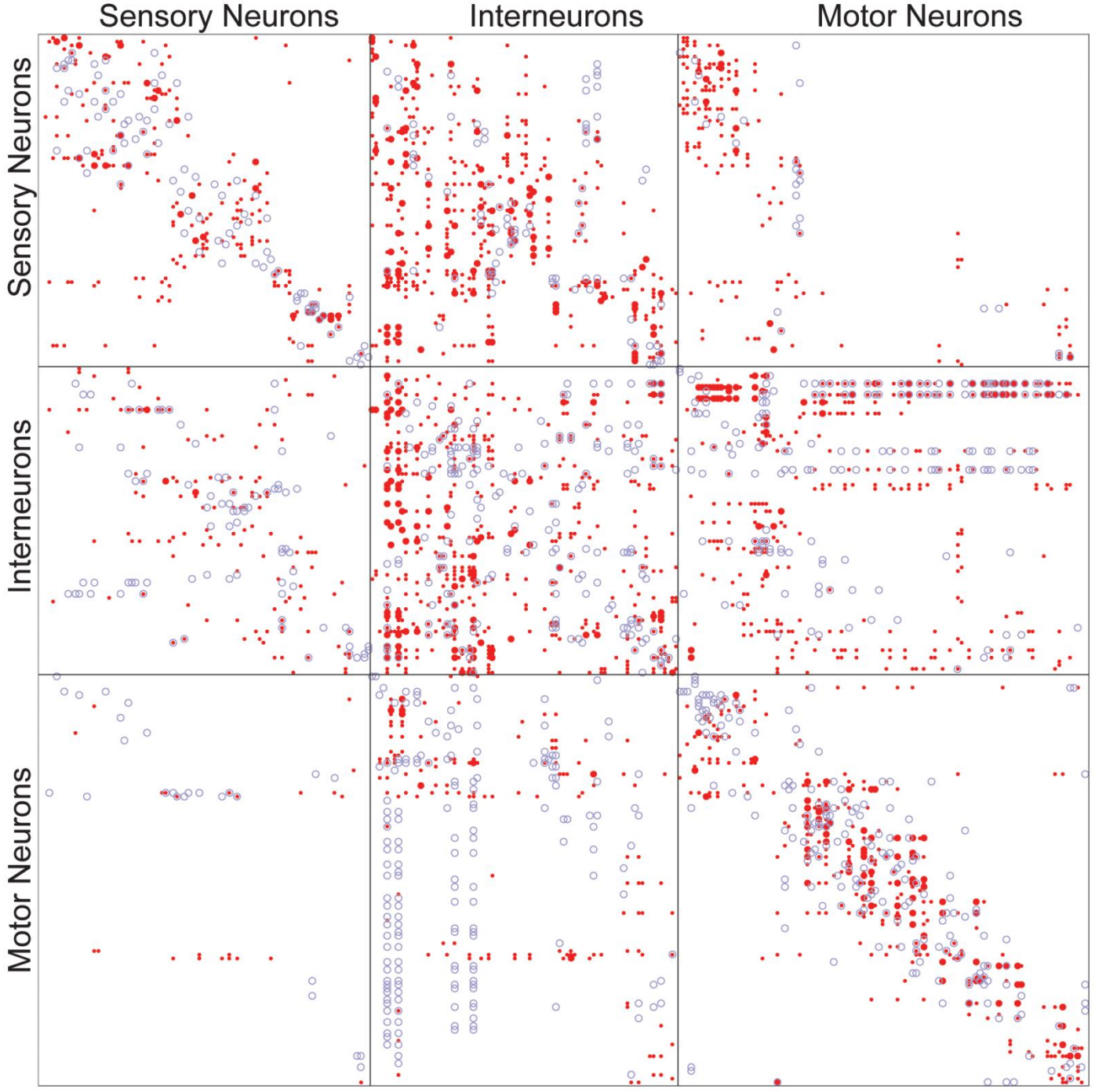

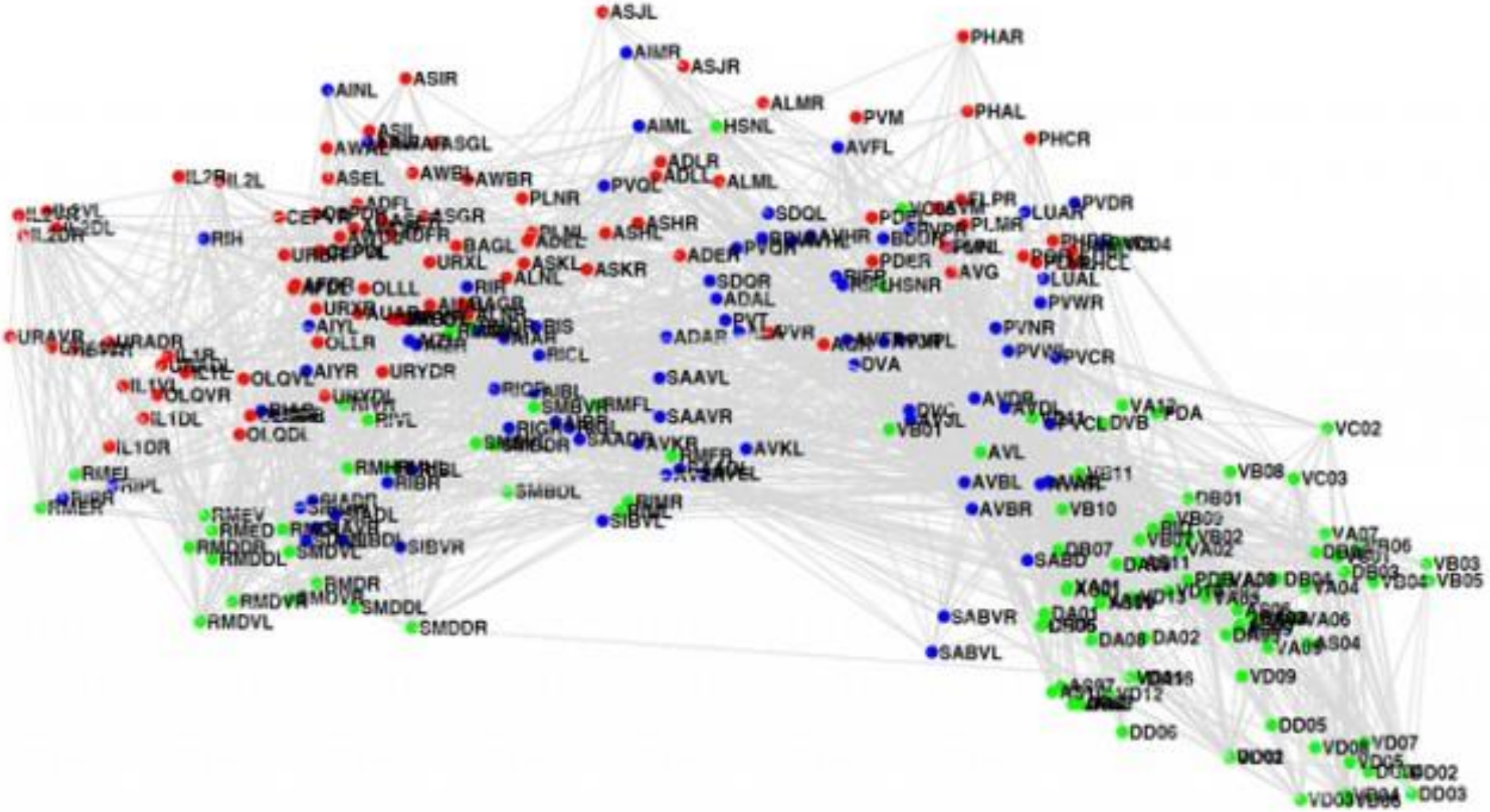
ASJL
PHAR
AIMR
ASJR
ASIR
AINL
ALMR
PVM
PHAL
AIML
HSNL
PHCR
AVFL
ASGL
ADLR
ASEL
AWBR
PVQL
ALML
PLNR
ADFL
ASGR
SDQL
LUAR
PVDR
RIH
ASHR
PLMR
BAGL
ADEL
URXL
ASKL
ASKR
ADER
PDER
AVG
LUAL
OLLL
ALNL
SDQR
HSNR
ADAL
PVWR
AIYL
PVNR
URAVR
URADR
OLLR
ADAR
RICL
DVA
PVCR
AIYR
URYDR
SAAVL
OLQVR
RMFL
SAAVR
IL1DL
OLQDL
VB01
DVB
VC02
IL1DR
AVKL
AVL
VB08
VC03
RMEI
RIBR
SMBDL
AVBL
DB01
RMEV
AVBR
VB10
SIBVL
SIBVR
VA07
VB03
VB05
RMDDL
SMDVL
SABD
RMDR
SMDDL
SABVR
RMDVL
SMDDR
DA08
DA02
SABVL
VD09
DD05
DD06
VD07
DD02
DD03

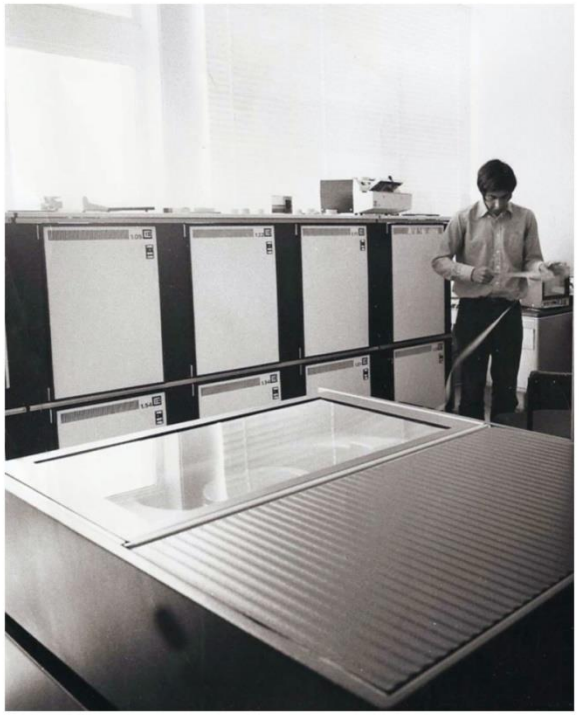

John White

Eileen Southgate

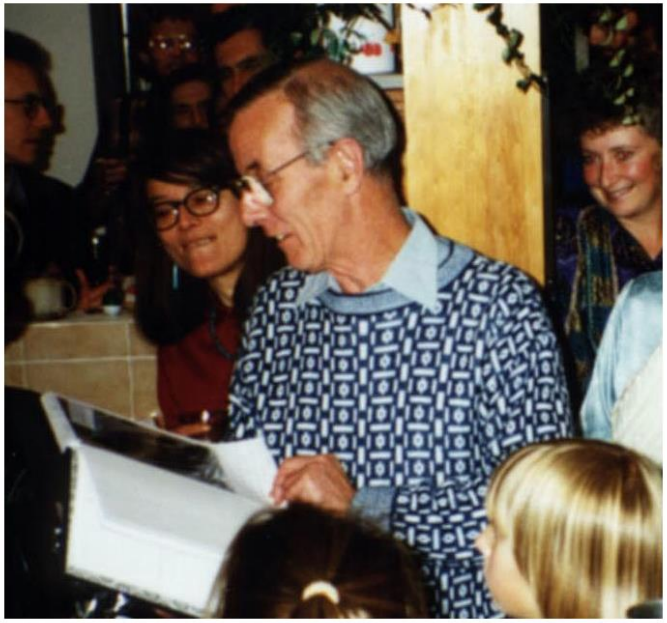

Nichol Thomson

Sydney Brenner

John G. White, “Getting into the mind of a worm—a personal view,” in *WormBook*, ed. The *C. elegans* Research Community, WormBook, 25 June 2013, doi: 10.1895/wormbook.1.158.1

Karyn Hede, “There’s Gold in Those Archives,” *HHMI Bulletin*, pp. 23–27, May 2006.

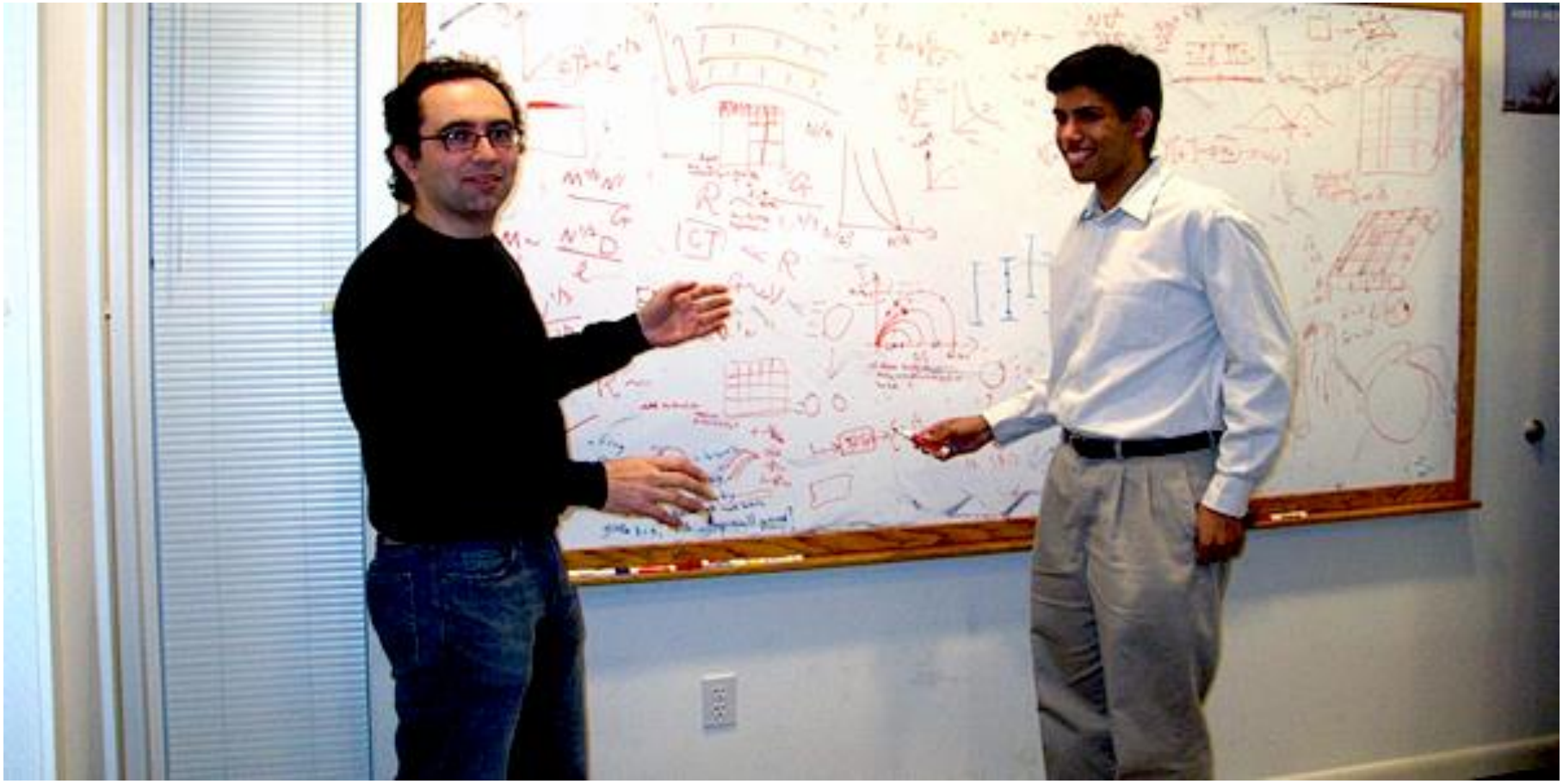

Connectomics, the generation and analysis of neuronal connectivity data, stands to revolutionize neurobiology just as genomics has revolutionized molecular biology. Indeed, since neuronal networks are the physical substrates upon which neural functions are carried out, their structural properties are intertwined with the organization and logic of function.