Control System for Hydraulic Bicycle

ECE 445 Presentation

Iain Brearton

Group 2

Overview

- Introduction and Competition Details
- Client Requirements
- Design
- Building and Testing
- Reflection
- Conclusion

Introduction

- Parker-Hannifin Chainless Challenge 2015
- Team of Mechanical Engineers
- Custom control system and user interface



Competition Races

Sprint Race
- 200 meter straight course
- Bicycle may be pre-charged

Efficiency Challenge
- 10 minutes charging period
- No pedaling
- (WL)/(PV)

Time Trial
- 6.2 mile race
- At least 1 rider change
- Slalom section

Client Requirements

- Control 6 electromechanical valves
- Read and show output from 2 pressure sensors
- Take user input
- Give visual feedback to user, including text
- Have a simple user interface

Design

- ATmega328p microcontroller
- Valve control with relays
- Illuminated buttons on UI
- LCD for UI status text
- µC ADC for pressure sensors
- I2C communication bus
- Safety in hardware and software

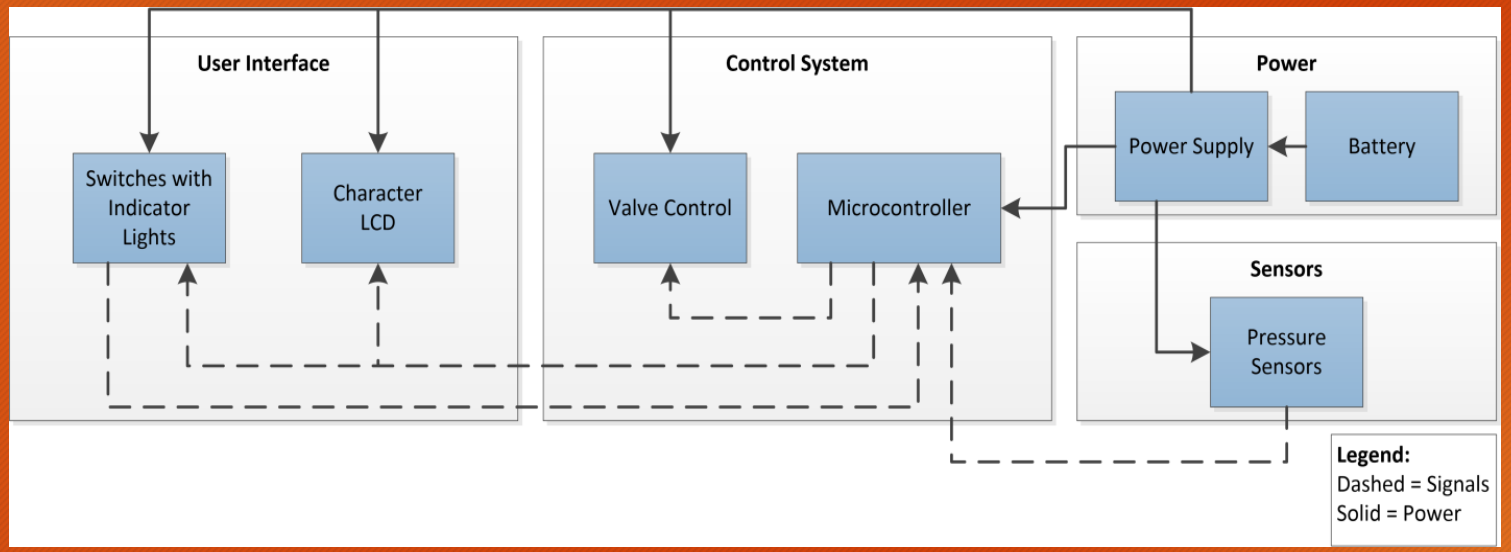

Design

- ATmega328p microcontroller
- Valve control with relays
- Illuminated buttons on UI
- LCD for UI status text
- µC ADC for pressure sensors
- I2C communication bus
- Safety in hardware and software



Valve Control Circuit – Transistor Calculations

- Potential Issue: Microcontroller pin currents
- Relay coil and LED current greater than pin and bus current limits
- Pin current becomes an acceptable 1.23mA

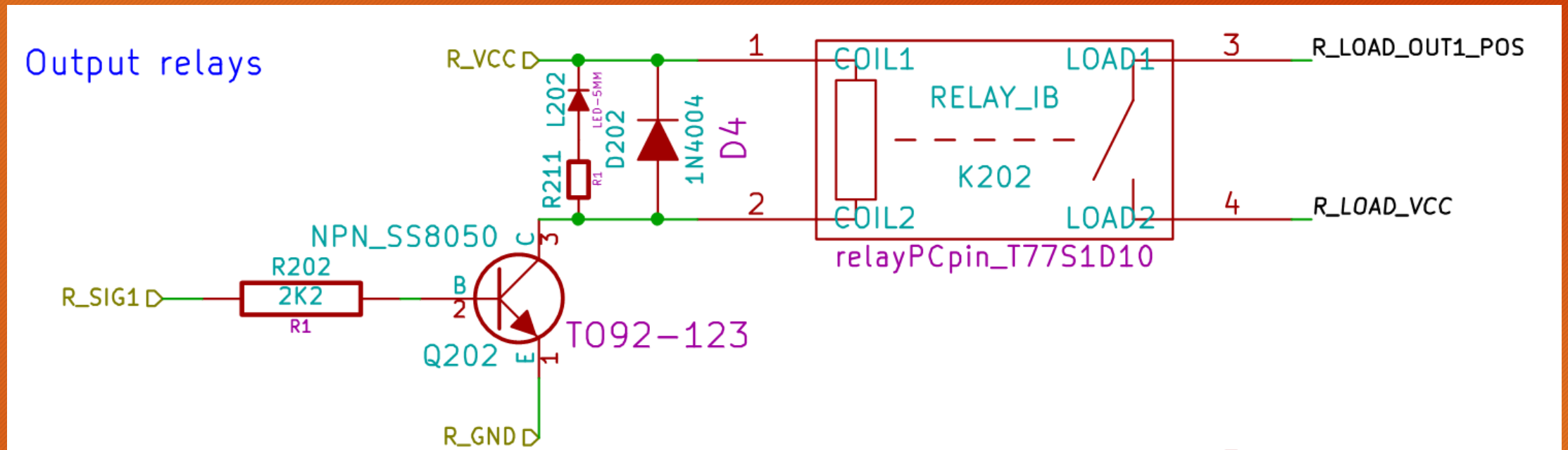

Requirements and Verification

- User interface buttons can be read and illuminated
- Character LCD displays arbitrary text input
- Microcontroller properly controls system
- Robust power supply
  - Reverse polarity protection
  - 5 ± 0.25 V at 2 ± 0.25 A for 1 hour
- Battery lasts throughout competition
  - ≥ 6 hours above 11 ± 0.5 V at 2.4 ± 0.1 A
- Pressure sensors display 0 PSIG at atmospheric pressure and change intuitively

Project Build – Control System

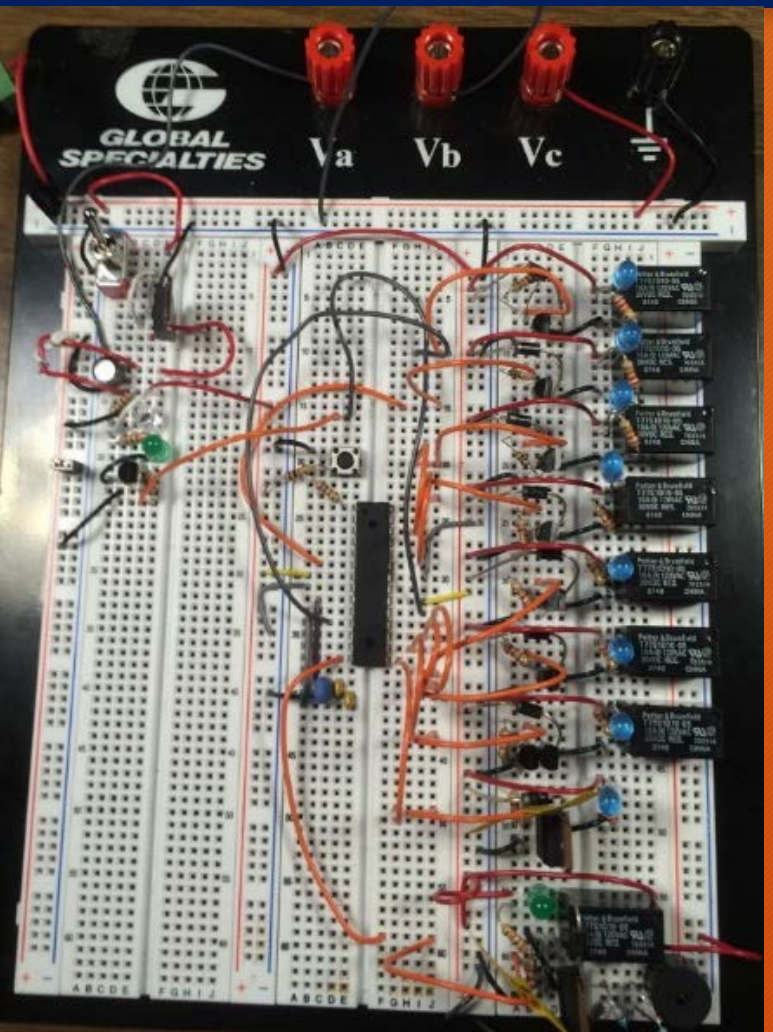

First generation



Final control system

Project Build – User Interface

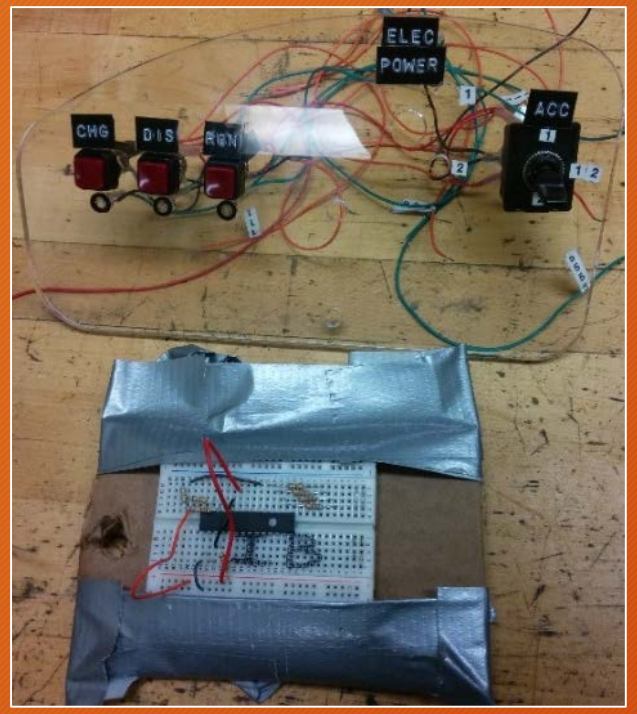

First generation



Second generation

Project Build – User Interface



Final user interface

Functional Tests

- Tested hardware incrementally with new software features
- First bike testing in mid-February
- As features were added, MechEs iterated mechanical design
- Tested fully-functional trike in early March, before spring break



Successes and Challenges

Successes

- Met deadlines with working product on a tight schedule
- Iterated design with feedback from client
- Competed in California and won 2nd place overall

Challenges

- Client defines problem
- Compact schedule – little time between deadlines
- Using Box as version control

Feature Video

FLEET Showcase

Further Work

- Recruit an ECE student for next year's team
- Adapt control system to meet new clients' demands
- Add measurement averaging for pressure sensors
- Improve code efficiency
- Waterproof user interface

Conclusions

- Bicycle works for intended use case
- Custom control system and user interface

