NMOS: $\mu_n C_{OX} = 100\mu A/V^2; V_{TN} = 1V$ **PMOS:** $\mu_p C_{OX} = 50\mu A/V^2; |V_{TP}| = 1V$

1. For the circuits shown in the figure below, find the emitter, base, and collector voltages and currents. Use $\beta = 100$ and assume $|V_{BE}| = 0.7$ V independent of current.

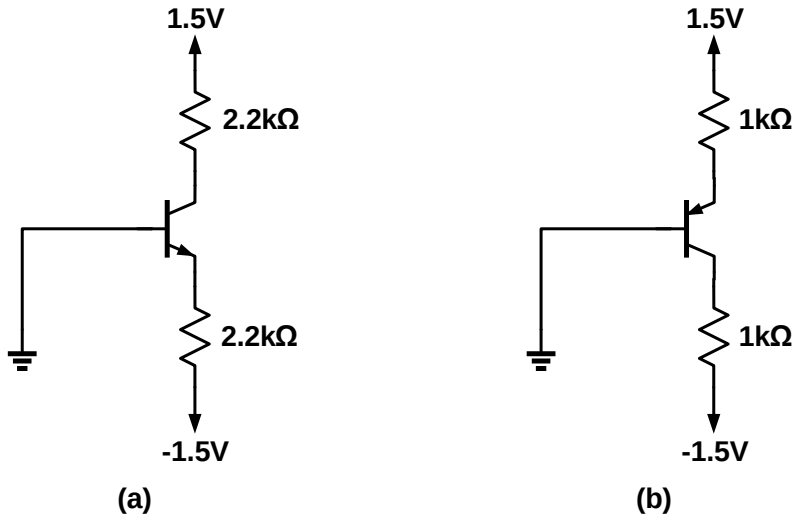

2. Consider the circuit in figure below, given that $R_S = 500\Omega$, $R_C = R_E = 2k\Omega$, $R_L = 3k\Omega$, $R_{B1} = 70k\Omega$, and $R_{B2} = 30k\Omega$. Assume that $\beta = 100$, $V_{BE} = 0.7$ V, $r_o = \infty$, and $V_T = 25$mV. Determine the incremental gain $A_v = \frac{v_{out}}{v_{in}}$.

