Problem Set #7 Solutions

1. Using incremental model, derive the expression for equivalent impedance, R_{eq}, of the configurations shown below. You may assume all transistors are biased in saturation region and $g_m r_{ds} \gg 1$ but $r_{ds} \neq \infty$.

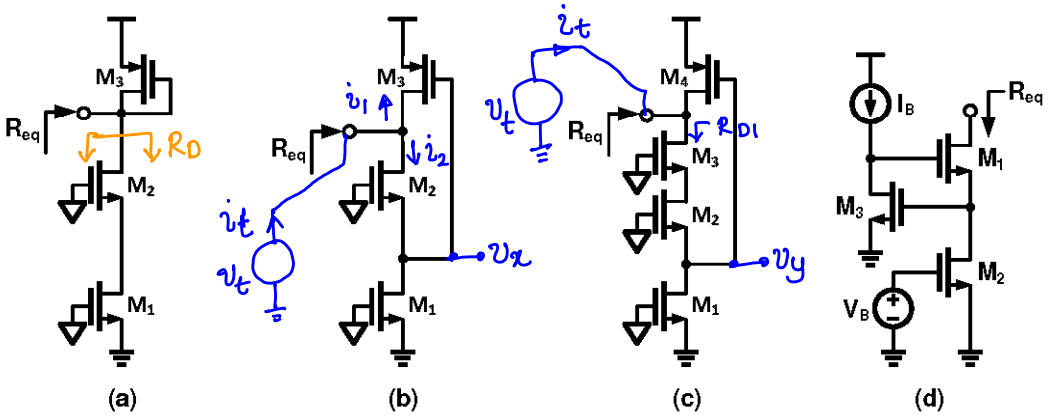

(a) $R_{eq} = \frac{1}{g_{m3}} \parallel R_D \; ; \; R_D = r_{ds1} + r_{ds2} + g_{m2} r_{ds2} \cdot r_{ds1}$

(b) $i_t = i_1 + i_2 \; ; \; i_2 = \frac{v_t}{R_D} \; ; \; v_x = i_2 \cdot r_{ds1}$

$$i_1 = \frac{v_t}{r_{ds3}} + g_{m3} \cdot v_x = \frac{v_t}{r_{ds3}} + g_{m3} \cdot \frac{v_t}{R_D} \cdot r_{ds1}$$

$$\Rightarrow \frac{i_1}{v_t} = \frac{1}{r_{ds3}} + \frac{g_{m3} r_{ds1}}{R_D} \Rightarrow \frac{i_t}{v_t} = \frac{1}{R_D} + \frac{1}{r_{ds3}} + \frac{g_{m3} r_{ds1}}{R_D}$$

$$\Rightarrow \boxed{R_{eq} = R_D \parallel r_{ds3} \parallel \frac{R_D}{g_{m3} r_{ds1}}}$$

(c) $R_{D1} = R_D + r_{ds3} + g_{m3} r_{ds3} \cdot R_D$

$$i_t = \frac{v_t}{R_{D1}} + \frac{v_t}{r_{ds4}} + g_{m4} \cdot v_y \; ; \; v_y = \frac{v_t}{R_{D1}} \times r_{ds1}$$

$$\Rightarrow \boxed{R_{eq} = R_{D1} \parallel r_{ds4} \parallel \frac{R_{D1}}{g_{m4} r_{ds1}}}$$

(d)

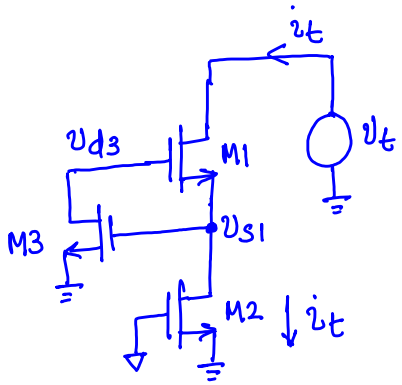

$$R_{eq} = \frac{v_t}{i_t} \Rightarrow i_t = \frac{v_t}{R_{eq}}$$

$$v_{s1} = i_t \cdot r_{ds2}$$

$$v_{ds3} = -g_{m3} \cdot r_{ds3} \cdot v_{s1}$$

$$i_t = g_{m1} \underbrace{\left[-g_{m3} r_{ds3} v_{s1} - v_{s1} \right]}_{v_{gs1}} + \underbrace{\frac{v_t - v_{s1}}{r_{ds1}}}_{\text{current through } r_{ds1}}$$

$$i_t \left[r_{ds1} + g_{m1} \left(1 + g_{m3} r_{ds3} \right) \cdot r_{ds2} \cdot r_{ds1} + r_{ds2} \right] = v_t$$

$$\Rightarrow \boxed{R_{eq} = r_{ds1} + r_{ds2} + g_{m1} r_{ds1} r_{ds2} \left(1 + g_{m3} r_{ds3} \right)}$$

$A_V = -G_M R_{OUT}$

2. Determine the incremental gain ($A_V = \frac{v_{out}}{v_{in}}$) for the amplifier configurations shown below. Ignore body effect and assume all transistors are biased in saturation region.You may also assume $g_m r_{ds} \gg 1$ but $r_{ds} \neq \infty$.

NOTE: v_{in} is connected to M1 & M2 ⇒ use superposition

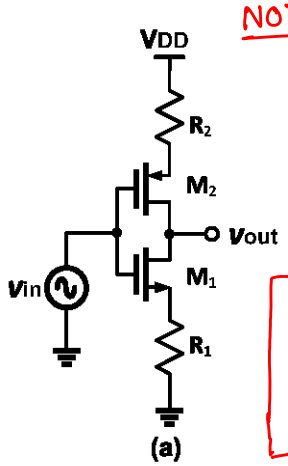

(a)

$$G_M = \underbrace{\frac{g_{m1}}{1+g_{m1}R_1}}_{\text{due to M1}} + \underbrace{\frac{g_{m2}}{1+g_{m2}R_2}}_{\text{due to M2}}$$

$$R_{OUT} = \underbrace{(R_1 + r_{ds1} + g_{m1} r_{ds1} R_1)}_{R_{DOWN}} \parallel \underbrace{(R_2 + r_{ds2} + g_{m2} r_{ds2} R_2)}_{R_{UP}}$$

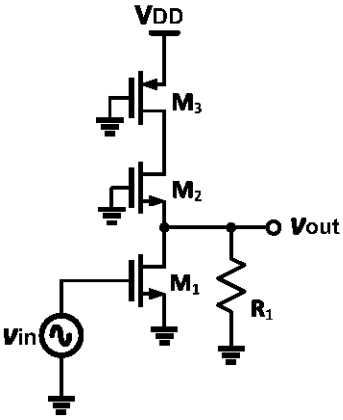

(b)

$$G_M = g_{m1}$$

$$R_{OUT} = r_{ds3} \parallel R_1 \parallel \frac{1}{g_{m3}}\left[1 + \frac{r_{ds3}}{r_{ds2}}\right]$$

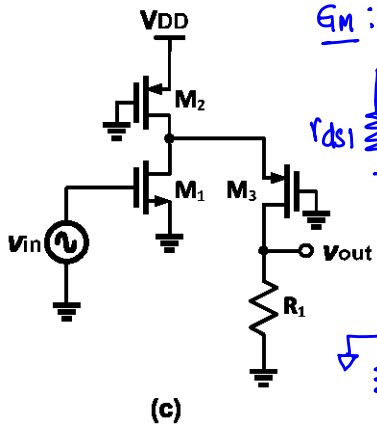

(c)

G_M:

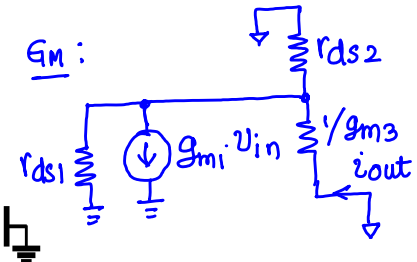

$$i_{out} = g_{m1} \cdot v_{in} \cdot \underbrace{\frac{(r_{ds2} \parallel r_{ds1})}{(r_{ds2} \parallel r_{ds1}) + 1/g_{m3}}}_{\approx 1}$$

if $\frac{1}{g_{m3}} \ll (r_{ds1} \parallel r_{ds2})$

$\Rightarrow G_M \approx g_{m1}$

R_{OUT}:

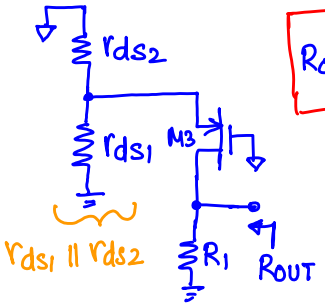

$$R_{OUT} = R_1 \parallel (r_{ds1} \parallel r_{ds2}) + r_{ds3} + g_{m3} r_{ds3} (r_{ds1} \parallel r_{ds2})$$

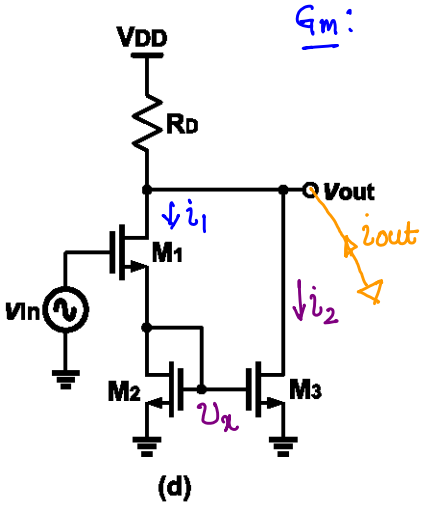

G_m: $\quad i_{out} = i_1 + i_2$

$$i_1 = \frac{g_{m1}}{1 + \frac{g_{m1}}{g_{m2}}} \cdot v_{in}$$

$$v_x = i_1 \cdot \frac{1}{g_{m2}} = \frac{g_{m1}}{1 + \frac{g_{m1}}{g_{m2}}} \cdot \frac{1}{g_{m2}} \cdot v_{in}$$

$$i_2 = g_{m3} \cdot v_x = \frac{g_{m1}}{1 + \frac{g_{m1}}{g_{m2}}} \cdot \frac{g_{m3}}{g_{m2}} \cdot v_{in}$$

$$\Rightarrow \boxed{G_m = \frac{g_{m1}}{1 + \frac{g_{m1}}{g_{m2}}} \left[1 + \frac{g_{m3}}{g_{m2}} \right]}$$

R_{OUT}:

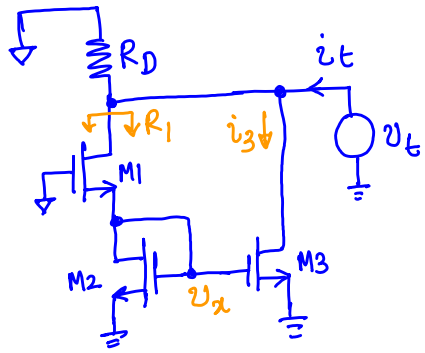

$$i_t = \frac{v_t}{R_D} + \frac{v_t}{R_1} + i_3$$

$$R_1 = 1/g_{m2} + r_{ds1} + \frac{g_{m1}}{g_{m2}} \cdot r_{ds1}$$

$$i_3 = g_{m3} \cdot v_x + \frac{v_t}{r_{ds3}}$$

$$v_x = \frac{v_t}{R_1} \cdot \frac{1}{g_{m2}}$$

$$\Rightarrow i_t = \frac{v_t}{R_D} + \frac{v_t}{R_1} + \frac{v_t}{r_{ds3}} + \frac{v_t}{R_1 g_{m2}} \cdot g_{m3}$$

$$\Rightarrow \boxed{R_{OUT} = R_D \,||\, R_1 \,||\, r_{ds3} + \frac{R_1 \cdot g_{m2}}{g_{m3}}}$$

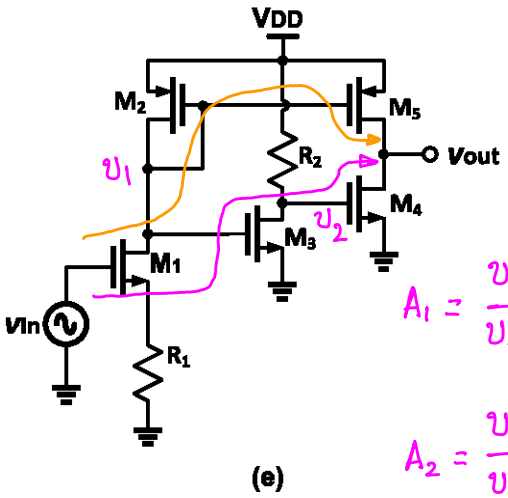

(e)

PATH #1

$$\frac{v_{out1}}{v_{in}} = \frac{v_1}{v_{in}} \times \frac{v_2}{v_1} \times \frac{v_{out1}}{v_2}$$

$$A_1 = \frac{v_1}{v_{in}} = -\frac{g_{m1}}{1+g_{m1}R_1} \times \left[\frac{1}{g_{m2}} \,||\, \left(R_1 + r_{ds1} + g_{m1} r_{ds1} R_1\right)\right]$$

$$A_2 = \frac{v_2}{v_{in}} = -g_{m2} \times \left(R_2 \,||\, r_{ds3}\right)$$

$$A_3 = \frac{v_{out1}}{v_2} = -g_{m4} \times \left(r_{ds5} \,||\, r_{ds5}\right)$$

PATH #2

$$\frac{v_{out2}}{v_{in}} = \frac{v_1}{v_{in}} \times \frac{v_{out2}}{v_1}$$

$$A_4 = \frac{v_{out2}}{v_{in}} = -g_{m5} \times \left(r_{ds5} \,||\, r_{ds4}\right)$$

$$A_v = \frac{v_{out}}{v_{in}} = \frac{v_{out1} + v_{out2}}{v_{in}} = \frac{v_{out1}}{v_{in}} + \frac{v_{out2}}{v_{in}}$$

$$\boxed{A_v = A_1 \cdot A_2 A_3 + A_1 \cdot A_4}$$

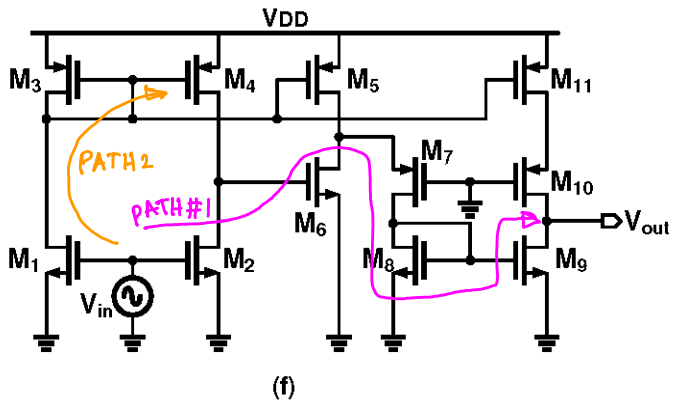

(f)

PATH #1: (Gain because of M2)

$$A_{v2} \approx -g_{m2}\left(r_{ds2} \| r_{ds4}\right) \times -\frac{g_{m6}}{g_{m8}} \times -g_{m9} R_{OUT}$$

$$R_{OUT} = r_{ds9} \| \left[r_{ds10} + r_{ds11} + g_{m10} r_{ds10} r_{ds11} \right]$$

PATH 2:

$$A_{v1} = -\frac{g_{m1}}{g_{m3}} \times \left[-g_{m4} \cdot \left(r_{ds2} \| r_{ds4}\right) \times -\frac{g_{m6}}{g_{m8}} \times -g_{m9} R_{OUT} + -\frac{g_{m5}}{g_{m8}} \times -g_{m9} R_{OUT} + -g_{m11} R_{OUT} \right]$$

$$\boxed{A_v = A_{v1} + A_{v2}}$$