1. Using incremental model, derive the expression for equivalent impedance, R_{eq}, of the configurations shown below. You may assume all transistors are biased in saturation region and $g_m r_{ds} \gg 1$ but $r_{ds} \neq \infty$.

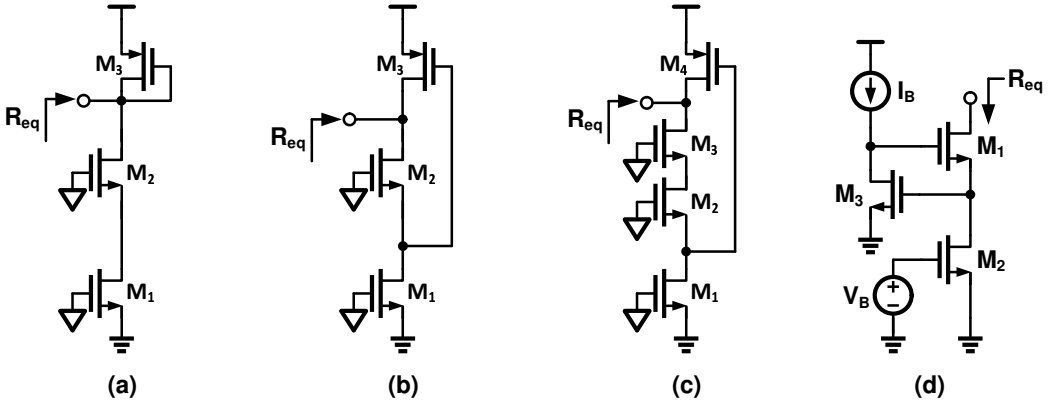

2. Determine the incremental gain ($A_V = \frac{v_{out}}{v_{in}}$) for the amplifier configurations shown below. Part (f) is optional and will not be graded. Ignore body effect and assume all transistors are biased in saturation region.You may also assume $g_m r_{ds} \gg 1$ but $r_{ds} \neq \infty$.

