Problem Set #6 Solutions

1. Using incremental model, derive the expression for equivalent impedance of the configurations shown below. You may assume all transistors are biased in saturation region and $r_{ds} \neq \infty$.

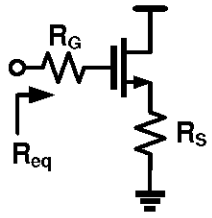

(a)

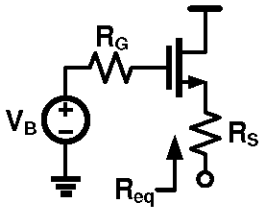

(b)

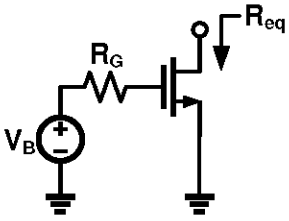

(c)

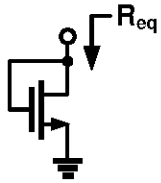

(d)

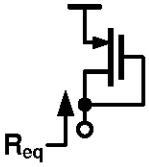

(e)

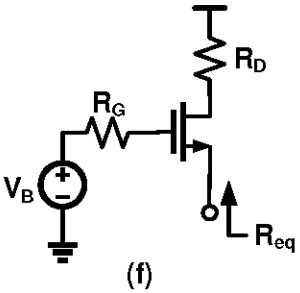

(f)

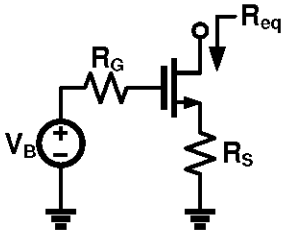

(g)

(a)

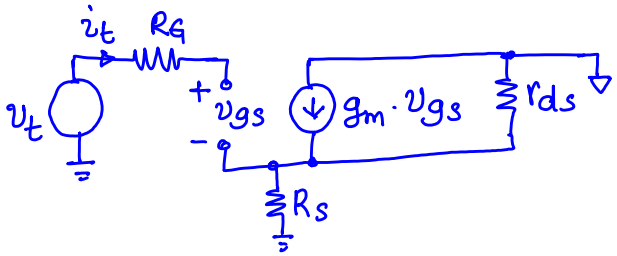

$i_t = 0 \Rightarrow \boxed{R_{eq} = \infty}$

(b)

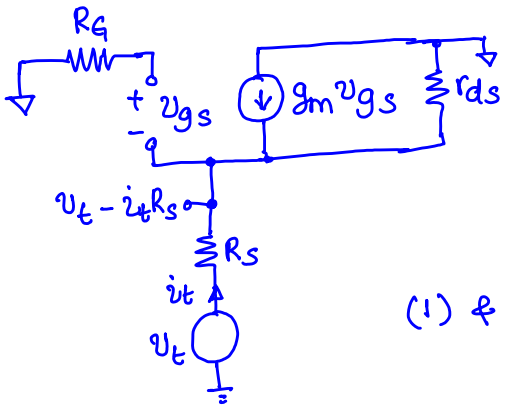

$$i_t + g_m v_{gs} = \frac{v_t - i_t R_s}{r_{ds}} \quad - (1)$$

$$v_{gs} = -(v_t - i_t R_s) \quad - (2)$$

$$(1) \& (2) \Rightarrow R_{eq} = \frac{v_t}{i_t} = R_s + \frac{r_{ds}}{1 + g_m r_{ds}}$$

if $g_m r_{ds} \gg 1$

$$\boxed{R_{eq} \approx R_s + 1/g_m}$$

(c)

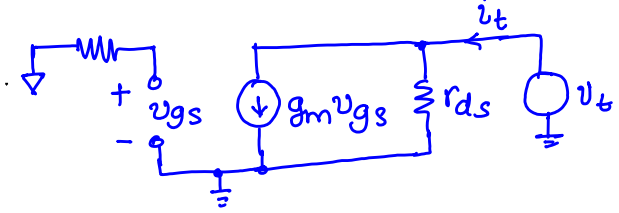

$v_{gs} = 0 \Rightarrow i_t = \frac{v_t}{r_{ds}}$

$\Rightarrow \boxed{R_{eq} = r_{ds}}$

(d) & (e) have the same incremental model. They are both "diode connected" devices.

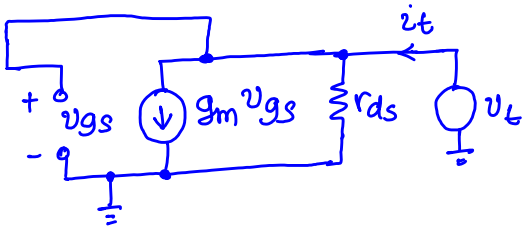

$i_t = \frac{v_t}{r_{ds}} + g_m \cdot v_t$

$\Rightarrow \frac{i_t}{v_t} = \frac{1}{r_{ds}} + g_m \Rightarrow R_{eq} = r_{ds} \,||\, 1/g_m$

if $g_m r_{ds} >> 1$ then $r_{ds} >> \frac{1}{g_m}$.

$\Rightarrow \boxed{R_{eq} \approx 1/g_m}$

(f)

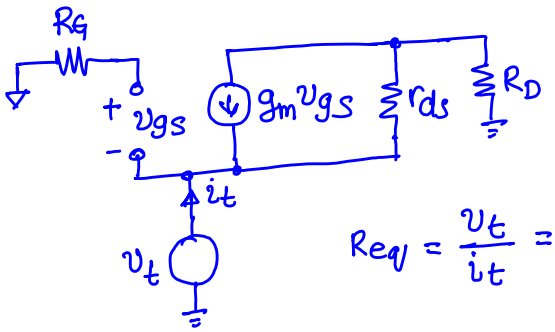

$i_t = g_m v_t + \frac{v_t - i_t R_D}{r_{ds}}$

$R_{eq} = \frac{v_t}{i_t} = \frac{R_D + r_{ds}}{1 + g_m r_{ds}} \boxed{\approx \frac{1}{g_m}\left[1 + \frac{R_D}{r_{ds}}\right]}$ if $g_m r_{ds} >> 1$

(g)

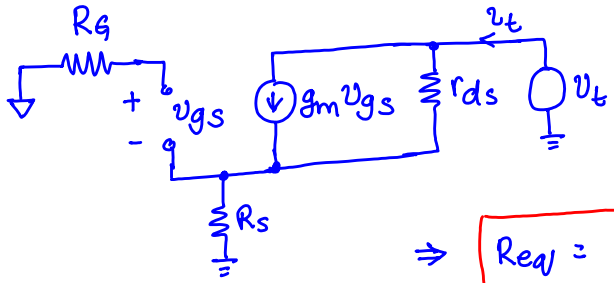

$i_t = g_m(-i_t R_S) + \frac{v_t - i_t R_S}{r_{ds}}$

$\Rightarrow \boxed{R_{eq} = \frac{v_t}{i_t} = r_{ds} + R_S + g_m r_{ds} R_S}$

2. Determine equivalent impedance (R_{eq}) for the configurations shown below. You may assume all transistors are biased in saturation region and $r_{ds} \neq \infty$.

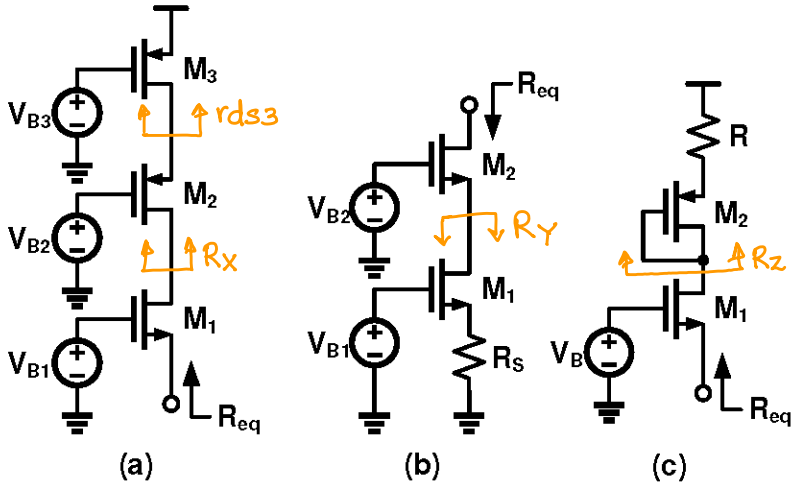

(a) $R_X = r_{ds2} + r_{ds3} + g_{m2} r_{ds2} r_{ds3}$ [using part 1(g)]

$$R_{eq} = \frac{1}{g_{m1}}\left[1 + \frac{R_X}{r_{ds1}}\right]$$ [using part 1(f)]

(b) $R_Y = R_S + r_{ds1} + g_{m1} r_{ds1} \cdot R_S$ [using part 1(g)]

$$R_{eq} = r_{ds2} + R_X + g_{m2} r_{ds2} R_X$$ (using part 1(g))

(c) $R_Z = R + 1/g_{m2}$

$$R_{eq} = \frac{1}{g_{m1}}\left[1 + \frac{R_Z}{r_{ds1}}\right]$$

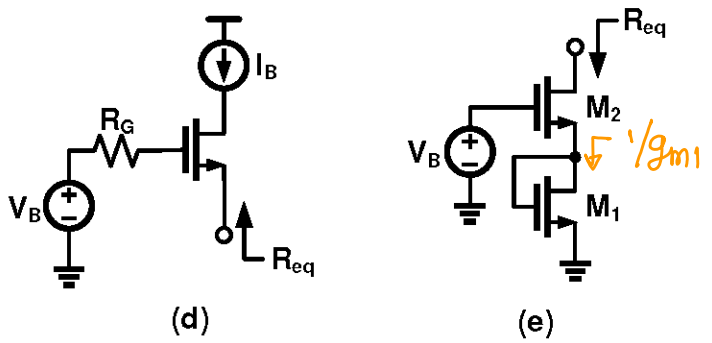

(d) $R_{eq} = \infty$ (using part 1(f) with $R_D = \infty$)

(e) $R_{eq} = 1/g_{m1} + r_{ds2} + \dfrac{g_{m2} r_{ds2}}{g_{m1}}$ [using part 1(g)]

3. Determine the incremental gain ($A_V = \frac{v_{out}}{v_{in}}$) for the amplifier configurations shown below. Ignore body effect and assume all transistors are biased in saturation region and $r_{ds} \neq \infty$.

$A_V = -G_M R_{OUT}$

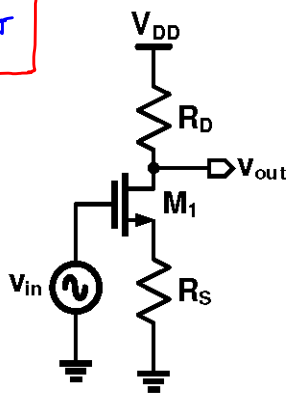

(a)

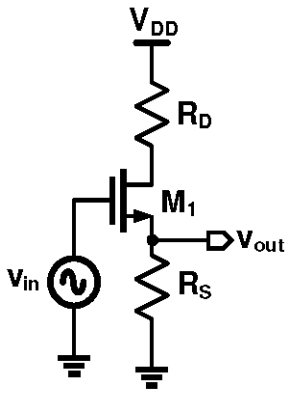

(b)

(a) $G_M = \dfrac{g_{m1}}{1 + g_{m1} R_S}$

from class notes on cs amplifier with degeneration

$R_{OUT} = R_D \,||\, [R_S + r_{ds1} + g_{m1} r_{ds1} R_S]$

(b) G_M :

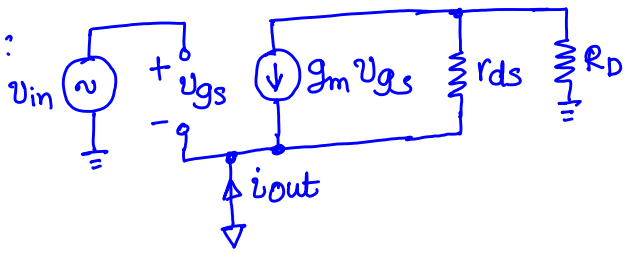

$i_{out} = -g_m v_{gs} - \dfrac{i_{out} R_D}{r_{ds}}$

$v_{gs} = v_{in}$

$\Rightarrow G_m = \dfrac{-g_m}{1 + R_D/r_{ds}}$

$R_{OUT} = R_S \,||\, R_{UP}$

$R_{UP} = \dfrac{1}{g_{m1}} \left[1 + \dfrac{R_D}{r_{ds1}}\right]$ (using part 1(f))

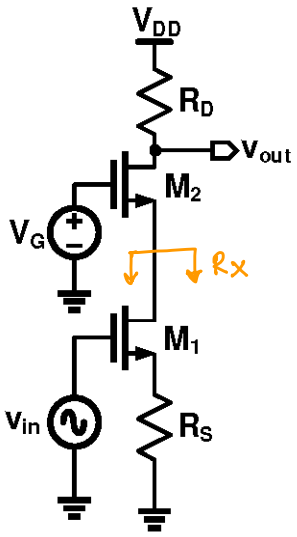

(c)

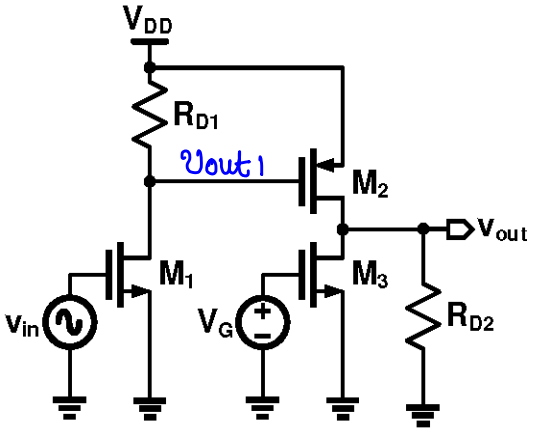

(d)

(c) $G_M = \dfrac{g_{m1}}{1 + g_{m1} R_S}$

$R_{OUT} = R_D \parallel R_{DN}$

$R_{DN} = R_x + r_{ds2} + g_{m2} r_{ds2} R_x$

$R_x = R_S + r_{ds1} + g_{m1} r_{ds1} R_S$

(d) $v_{out1} = -g_{m1} (R_{D1} \parallel r_{ds1})$

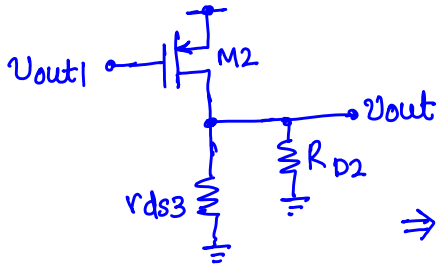

$v_{out} = -g_{m2} \cdot \left[r_{ds2} \parallel r_{ds3} \parallel R_{D2} \right] \cdot v_{out1}$

$\Rightarrow A_v = -g_{m1} (R_{D1} \parallel r_{ds1}) \times -g_{m2} \left[r_{ds2} \parallel r_{ds3} \parallel R_{D2} \right]$

Note: When two amplifier stages are cascaded, overall gain is equal to the product of individual stage gains.

$A_v = A_{v1} \times A_{v2}$

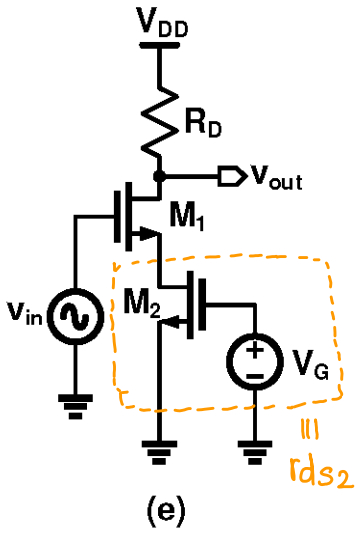

(e)

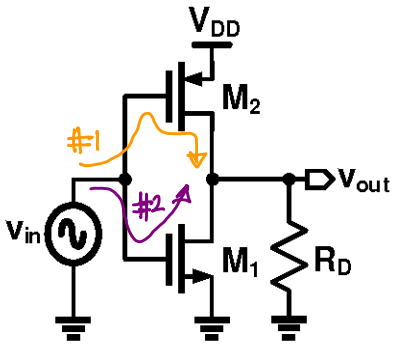

(f)

(e) $G_M = \dfrac{g_{m1}}{1 + g_{m1} \cdot r_{ds2}}$

$R_{OUT} = R_D \,||\, \left[r_{ds1} + r_{ds2} + g_{m1} r_{ds1} r_{ds2} \right]$

(f) Note: There are two paths from v_{in} to v_{out}

Path #1: Through M2

Path #2: Through M1

⇒ Use superposition to calculate the contribution from each path separately.

Path #1 :

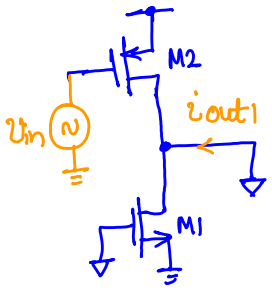

$i_{out1} = g_{m2} \cdot v_{in}$

Path #2 :

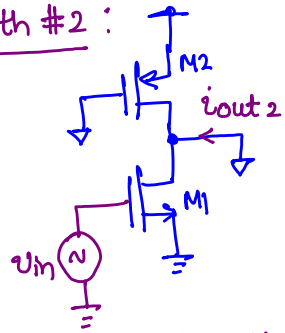

$i_{out2} = g_{m1} \cdot v_{in}$

$i_{out} = i_{out1} + i_{out2}$

$\Rightarrow G_M = g_{m1} + g_{m2}$

$R_{OUT} = r_{ds1} \,||\, r_{ds2}$

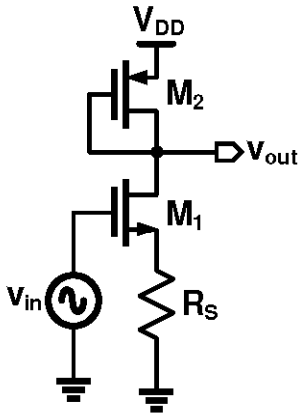

(g)

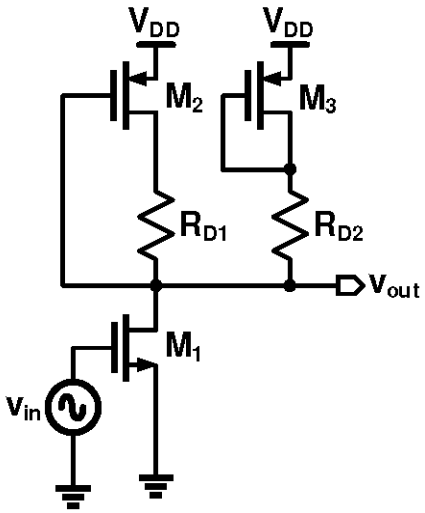

(h)

(g) $G_m = \dfrac{g_{m1}}{1 + g_{m1} R_S}$

$R_{OUT} = \dfrac{1}{g_{m2}} \parallel \left[R_S + r_{ds1} + g_{m1} r_{ds1} R_S \right]$

(h) $G_m = g_{m1}$

$R_{OUT} = R_{UP} \parallel R_{DN}$

$R_{DN} = r_{ds1}$

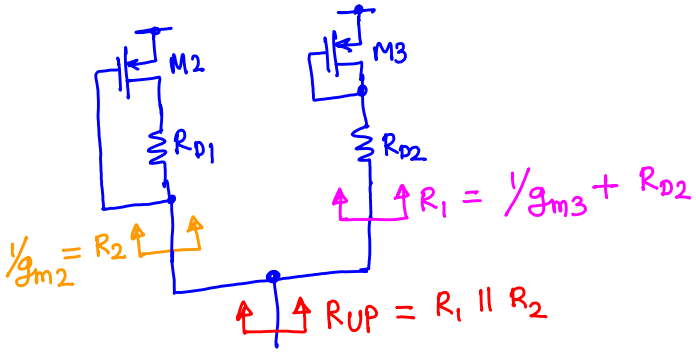

R_2 calculation:

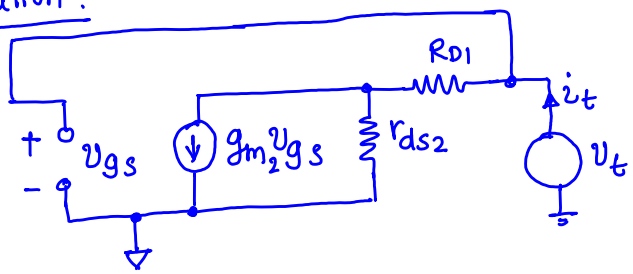

$i_t = g_{m2} v_t + \dfrac{v_t}{R_{D1} + r_{ds1}}$

$R_2 = \dfrac{v_t}{i_t} = \dfrac{1}{g_{m2}} \parallel (R_{D1} + r_{ds1})$

$\approx 1/g_{m2}$ if $g_m r_{ds} \gg 1$

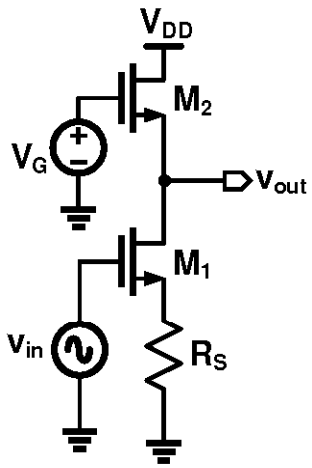

(i)

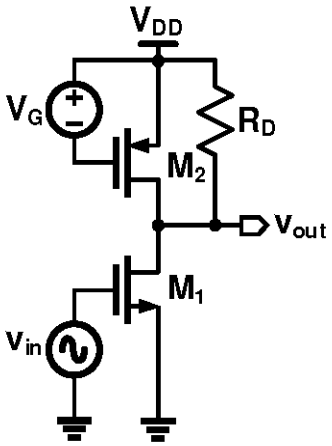

(j)

(i) $G_m = \dfrac{g_{m1}}{1 + g_{m1} R_S}$

$R_{OUT} = \dfrac{1}{g_{m2}} \parallel \left[R_S + r_{ds1} + g_{m1} r_{ds1} R_S \right]$

(j) $G_m = g_{m1}$

$R_{OUT} = r_{ds1} \parallel r_{ds2} \parallel R_D$

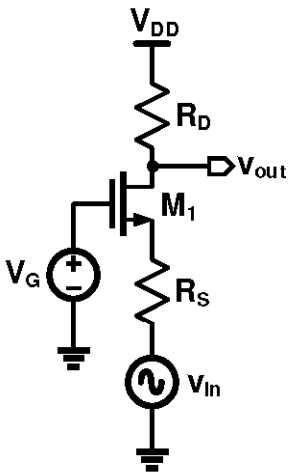

(k)

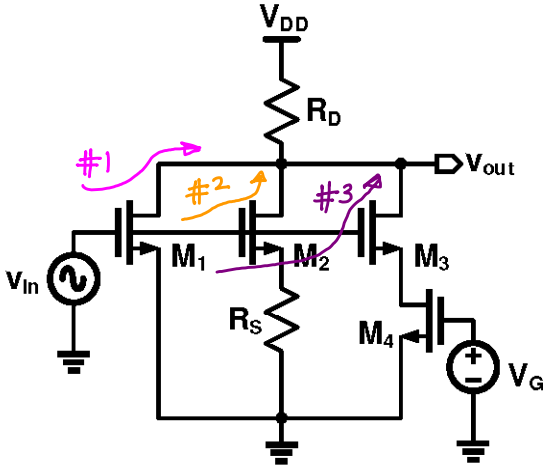

(l)

(K) Using CG stage analysis from notes

$$G_M = \frac{-g_{m1}}{1 + g_{m1} R_S}$$

$$R_{OUT} = R_D \parallel \left[R_S + r_{ds1} + g_{m1} r_{ds1} R_S \right]$$

(L) $$G_M = \underbrace{g_{m1}}_{\text{path \#1}} + \underbrace{\frac{g_{m2}}{1 + g_{m2} R_S}}_{\text{path \#2}} + \underbrace{\frac{g_{m3}}{1 + g_{m3} r_{ds4}}}_{\text{path \#3}}$$

$$R_{OUT} = R_D \parallel r_{ds1} \parallel \left[R_S + r_{ds2} + g_{m2} r_{ds2} R_S \right] \parallel \left[r_{ds4} + r_{ds3} + g_{m3} r_{ds3} r_{ds4} \right]$$