Problem Set #5 Solutions

NMOS: $\mu_n C_{OX} = 100\mu A/V^2; V_{TN} = 1V$ PMOS: $\mu_p C_{OX} = 50\mu A/V^2; |V_{TP}| = 1V$

1. Assuming all the MOS transistors are biased in saturation do the following for all the circuits shown below. You may also assume $g_m r_{ds} \gg 1$ but $r_{ds} \neq \infty$.

a. Sketch incremental model.

b. Compute an expression for gain, $A_V = \frac{v_{out}}{v_{in}}$.

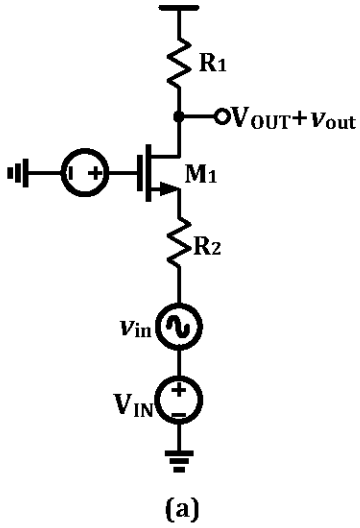

(a)

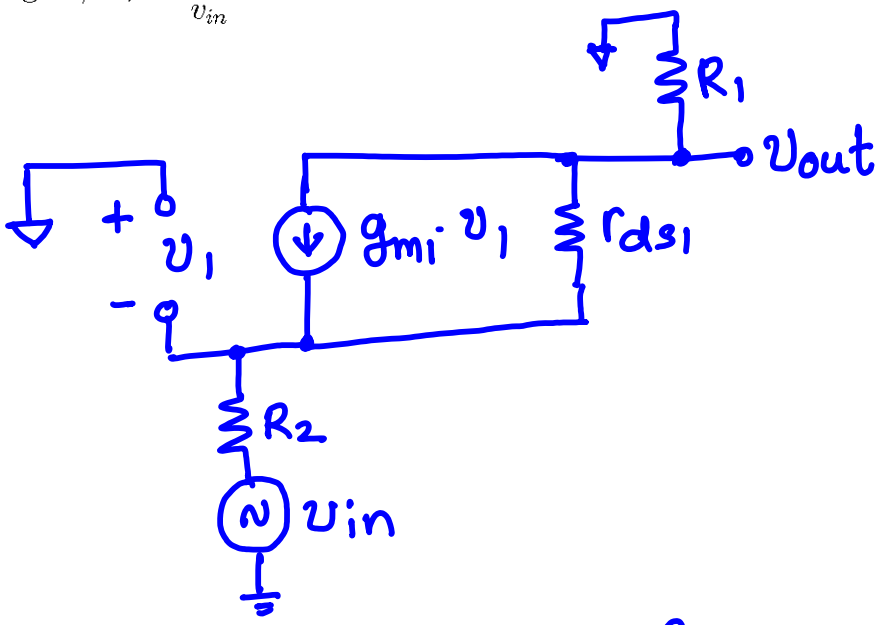

$$v_1 - \frac{v_{out}}{R_1} \cdot R_2 + v_{in} = 0 \Rightarrow v_1 = v_{out} \cdot \frac{R_2}{R_1} - v_{in} \quad -(1)$$

$$v_{out} = \left[-\frac{v_{out}}{R_1} - g_{m1} \cdot v_1 \right] \cdot r_{ds1} - \frac{v_{out}}{R_1} \cdot R_2 + v_{in} \quad -(2)$$

(1) in (2) $\Rightarrow$

$$\frac{v_{out}}{v_{in}} = \frac{(g_{m1} \cdot r_{ds1} + 1) \cdot R_1}{R_1 + R_2 + g_{m1} r_{ds1} R_2 + r_{ds1}}$$

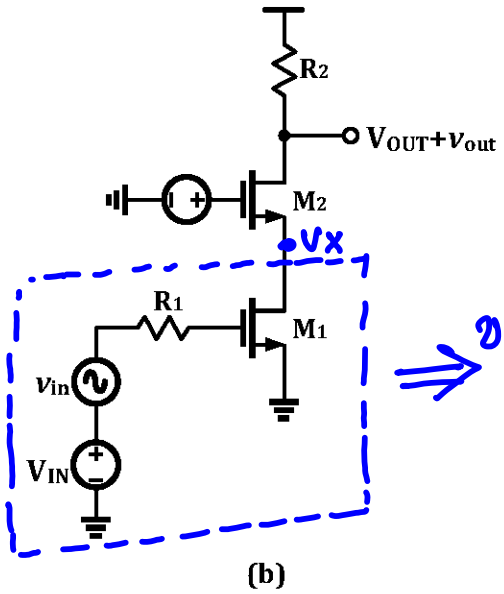

(b)

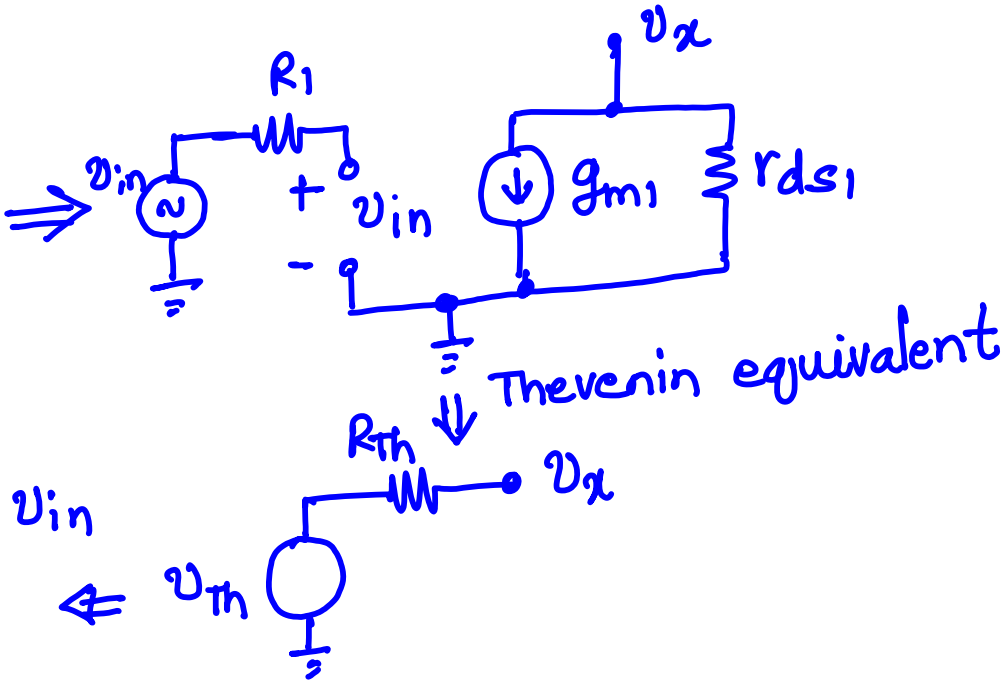

$$v_{th} = -g_{m1} \cdot r_{ds1} \cdot v_{in}$$

$$R_{Th} = r_{ds1}$$

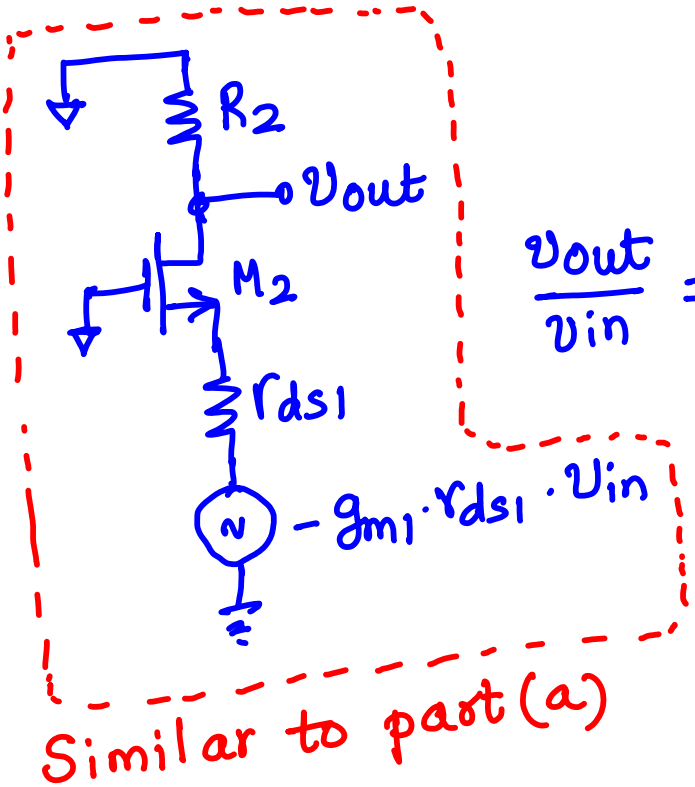

Similar to part (a)

$$\frac{v_{out}}{v_{in}} = \frac{-(g_{m2} r_{ds2} + 1) \cdot g_{m1} \cdot r_{ds1} \cdot R_2}{R_2 + r_{ds1} + g_{m2} r_{ds2} \cdot r_{ds1} + r_{ds2}}$$

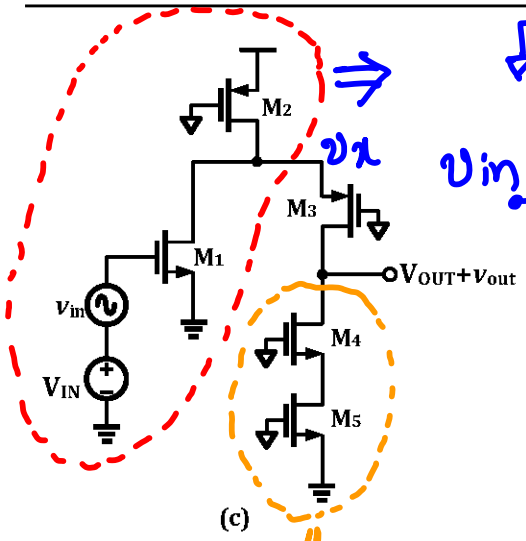

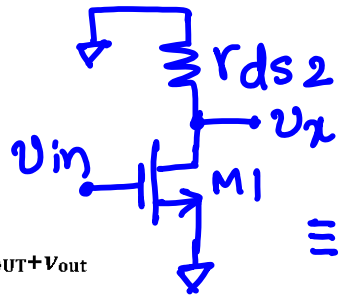

$\equiv$

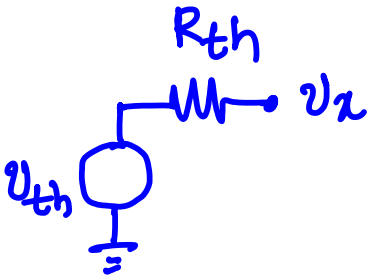

$$v_{th} = -v_{in} \cdot g_{m1} \cdot (r_{ds1} \,||\, r_{ds2})$$

$$R_{th} = (r_{ds1} \,||\, r_{ds2})$$

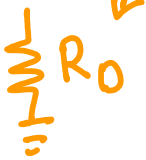

$$= r_{ds4} + r_{ds5} + g_{m4} r_{ds4} \cdot r_{ds5}$$

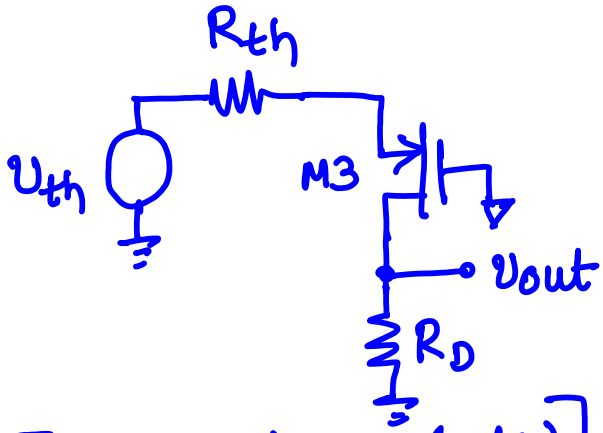

[similar to part (a)]

$$\frac{v_{out}}{v_{in}} = \frac{-(g_{m3} r_{ds3} + 1) \cdot g_{m1} (r_{ds1} \,||\, r_{ds2}) \cdot R_D}{R_D + (r_{ds1} \,||\, r_{ds2}) + g_{m3} r_{ds3} \cdot (r_{ds1} \,||\, r_{ds2}) + r_{ds3}}$$

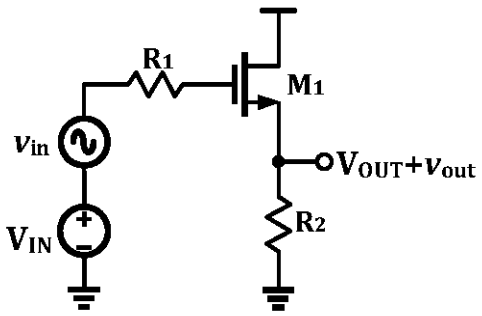

(d)

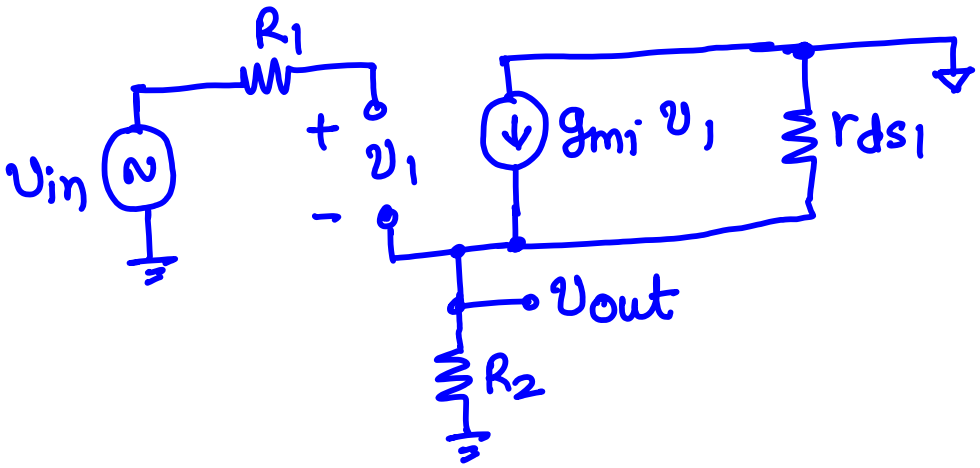

$$v_1 = v_{in} - v_{out}$$

$$v_{out} = g_{m1} \cdot (v_{in} - v_{out}) \cdot (R_2 \,||\, r_{ds1})$$

$$\Rightarrow v_{out} \left[1 + g_{m1} \cdot (R_2 \,||\, r_{ds1}) \right] = g_{m1} \cdot (R_2 \,||\, r_{ds1}) \cdot v_{in}$$

$$\Rightarrow \frac{v_{out}}{v_{in}} = \frac{g_{m1} \cdot (R_2 \,||\, r_{ds1})}{1 + g_{m1} (R_2 \,||\, r_{ds1})}$$

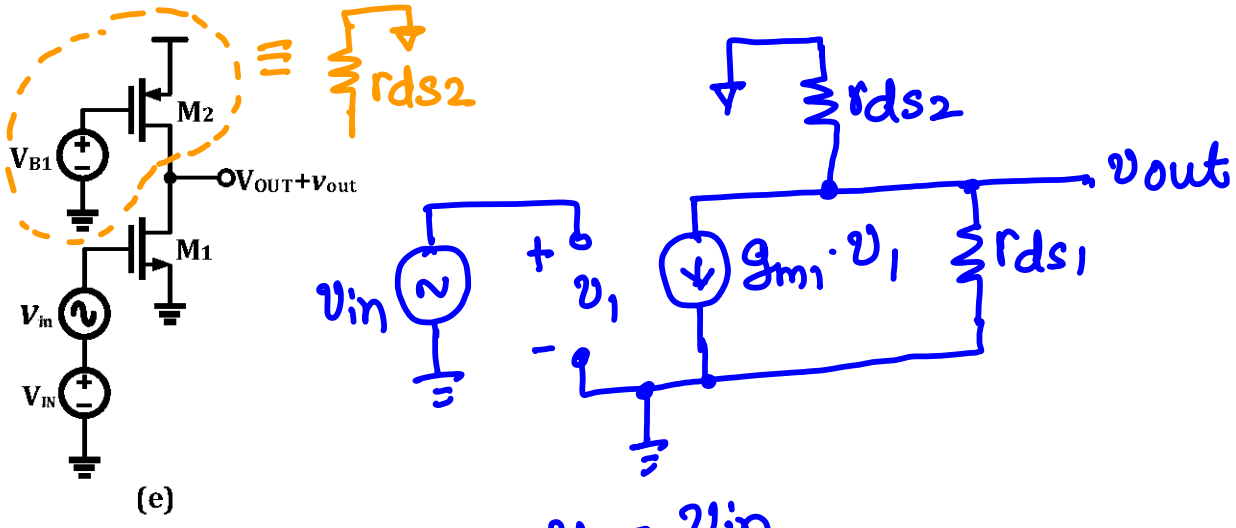

$v_1 = v_{in}$

$$\Rightarrow \frac{v_{out}}{v_{in}} = -g_{m1} \cdot (r_{ds1} \,||\, r_{ds2})$$

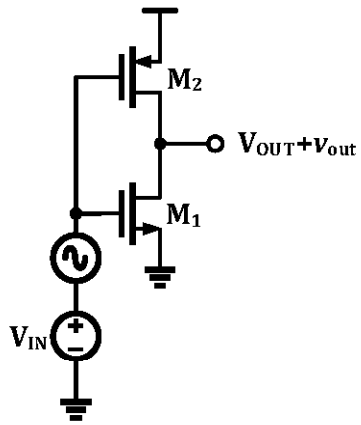

(f)

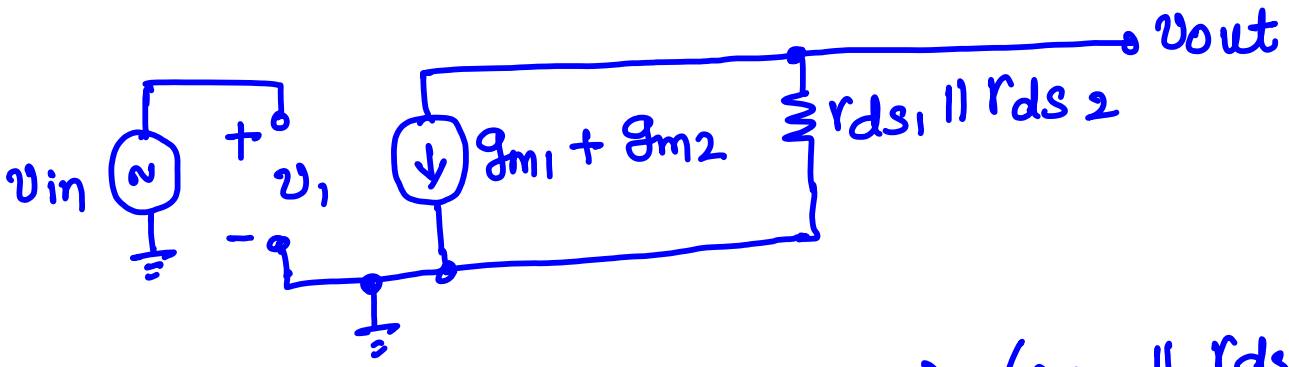

$$\frac{v_{out}}{v_{in}} = -(g_{m1} + g_{m2}) \cdot (r_{ds1} \parallel r_{ds2})$$

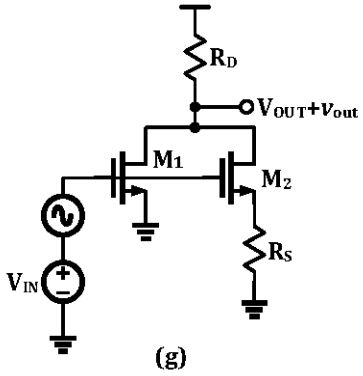

(g)

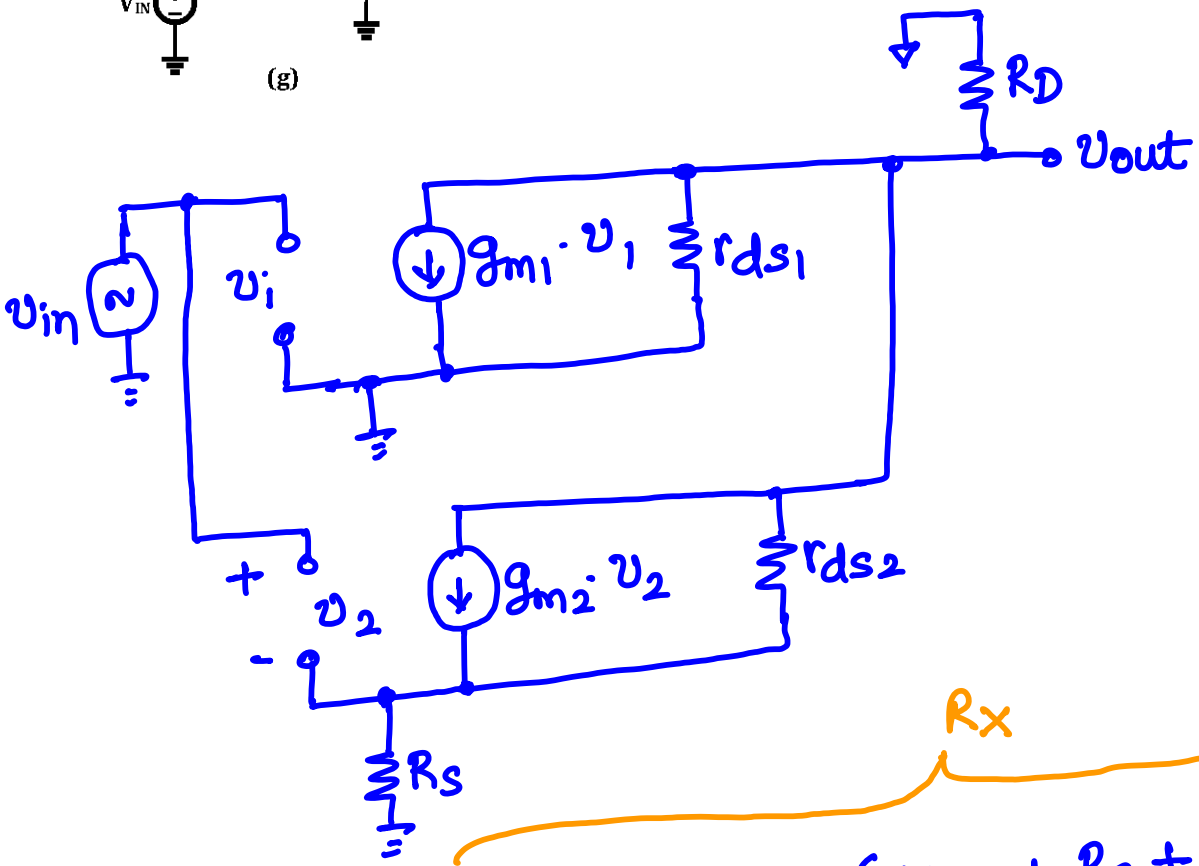

$$\frac{v_{out}}{v_{in}} = -g_{m1}\cdot\Big[\underbrace{r_{ds1} \,\|\, R_D \,\|\, (r_{ds2} + R_S + g_{m2} r_{ds2} R_S)}_{R_x}\Big] + \left(-\frac{g_{m2}}{1+g_{m2}R_S}\right)\cdot R_x$$