NMOS: $\mu_n C_{OX} = 100\mu A/V^2; V_{TN} = 1V$ **PMOS:** $\mu_p C_{OX} = 50\mu A/V^2; |V_{TP}| = 1V$

1. Given V_{DD}=5V, $R_1 = 40k\Omega$, $R_2 = 60k\Omega$, $R_D = 2.7k\Omega$, $R_S = 2k\Omega$, $\frac{W}{L} = \frac{450}{1}$, $R_{SRC} = 500\Omega$, and $R_L = 3k\Omega$. Ignore channel length modulation, $r_{ds} = \infty$.

Hint: An infinite-valued capacitor acts as an open circuit at DC but short at all other frequencies.

a. Find DC operating point i.e. find I_D, V_G, V_D.

b. Compute transistor g_m

c. Sketch incremental model.

d. Compute DC incremental gain $A_V = \frac{v_{out}}{v_{in}}$.

e. Compute the range of V_D for which transistor stays in saturation.

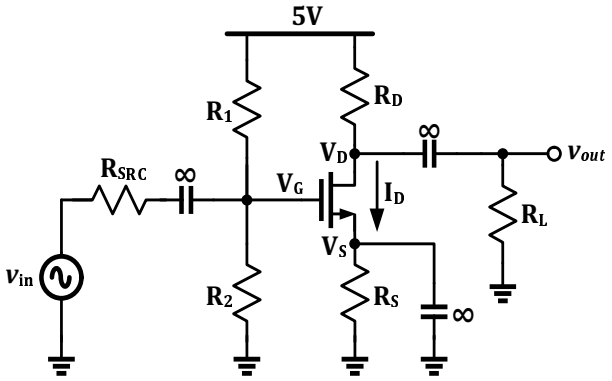

2. Consider PMOS common source amplifier shown below. Given V_{DD}=3V, V_{IN}=1.8V, $\frac{W}{L} = \frac{250}{1}$. Ignore channel length modulation, $r_{ds} = \infty$.

a. Compute I_D and V_{OUT}.

b. Sketch incremental model.

c. Find incremental gain $A_V = \frac{v_{out}}{v_{in}}$.

d. Compute range of output voltage for which transistor stays in saturation.

