Problem Set #3 Solutions

NMOS: $\mu_n C_{OX} = 100\mu A/V^2; V_{TH} = 1V$
PMOS: $\mu_p C_{OX} = 50\mu A/V^2; |V_{TH}| = 1V$

1. Determine region of operation of all transistors shown below.

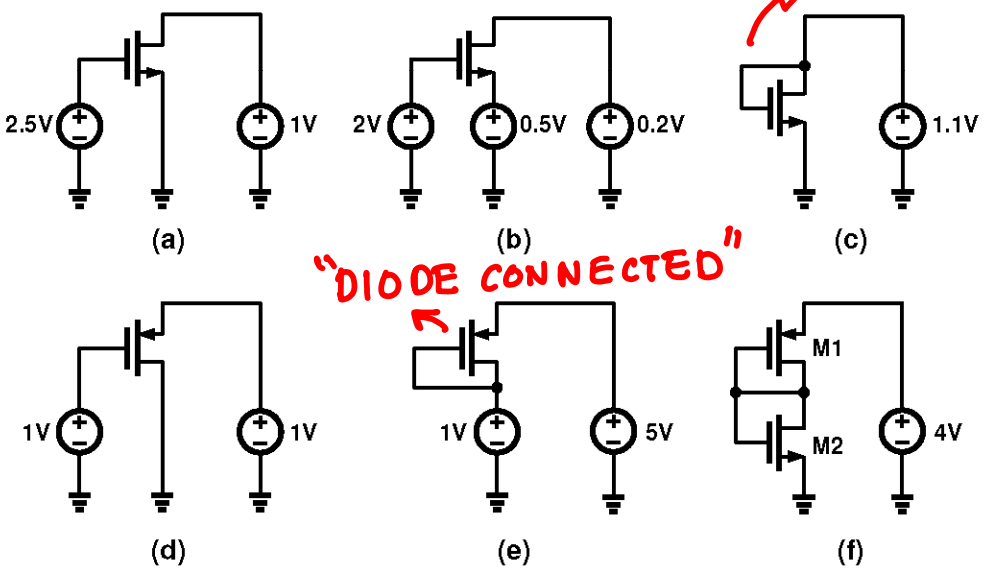

(a) $V_G - V_T = 2.5 - 1 = 3.5V > V_D = 1V \Rightarrow$ TRIODE

(b) $V_G - V_T = 2 - 0.5 = 1.5V > V_D = 0.5V \Rightarrow$ TRIODE

(c) $V_G = V_D \Rightarrow V_{GD} = 0 < V_T \Rightarrow$ SATURATION

(d) $V_{SG} = 0 < |V_{TP}| = 1 \Rightarrow$ CUTOFF

(e) $V_{GD} = 0 < |V_{TP}| \Rightarrow$ SATURATION

(f) M1 & M2 are both diode connected
AND $V_{SG1} + V_{GS2} > V_T + |V_{TP}| = 2V$
$\Rightarrow$ Both M1 and M2 are biased in SATURATION

2. Assuming $V_{DD} = 5V$ in the circuit shown below, perform the following.

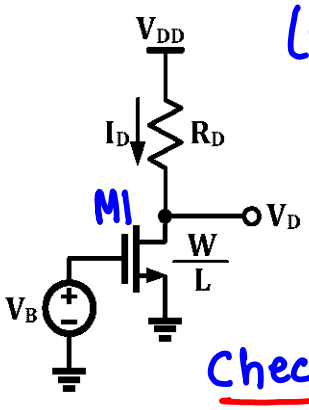

(a) Assuming M1 is biased in saturation:

$I_D = \frac{100\mu}{2} \times \frac{250}{1} \times (0.2)^2 =$ **500μA**

$V_D = V_{DD} - I_D \cdot R_D = 5 - 1 =$ **4V**

Check: $V_{DS} = 4V > V_{GS} - V_T = 0.2V \Rightarrow$ SATURATION

a. Given $V_B = 1.2V$, $W/L = 250$, and $R_D = 2K\Omega$, calculate V_D and I_D.

b. Given $V_B = 1.2V$ and $W/L = 250$, what value of R_D places the transistor at the edge of saturation (i,e. $V_{DS} = V_{GS} - V_{TH}$)?

c. Given $V_B = 1.2V$ and $R_D = 2K\Omega$, what values of W/L places the transistor at the edge of saturation?

d. Given $R_D = 2K\Omega$ and $W/L = 500$, what is the maximum allowable value of V_B, if the transistor must remain in saturation?

e. Given $V_B = 1.2V$, $W/L = 250$, and$R_D = 2K\Omega$, calculate the change in drain voltage, ΔV_D, when the gate voltage, V_B, is changed by 1mV.

f. Repeat part (e) when R_D is changed to $4K\Omega$.

g. Repeat part (e) when W/L is changed to $W/L = 1000$.

(b) Edge of saturation $\Rightarrow V_D = 0.2 = 5 - 0.5m \times R_D \Rightarrow$ **$R_D = 9.6k\Omega$**

(c) $V_D = 0.2V = 5 - I_D \times 2000 \Rightarrow I_D = 2.4mA \Rightarrow$ **$\frac{W}{L} = \frac{1200}{1}$**

(d) At the edge of saturation: $V_D = V_B - V_T$

$\Rightarrow V_B - V_T = 5 - \frac{100\mu}{2} \times \frac{500}{1} \times (V_B - V_T)^2 \Rightarrow$ **$V_B = 1.31V$**

(e) when $V_B = 1.2V$, $V_D = 4V$ [from (a)]. Similarly: $V_D = 3.9899$ when $V_B = 1.201$

$\Rightarrow \Delta V_D = 3.9899 - 4 =$ **-0.0101**

(f) $\Delta V_D = 2.98 - 3 =$ **$-0.02V$** (g) $V_D = 0.96$ when $\frac{W}{L} = \frac{1000}{1}$

$\Rightarrow$ **$\Delta V_D = -0.04V$**

3. Calculate node voltages V_1, V_2, V_3, and V_4 in the circuit shown below.

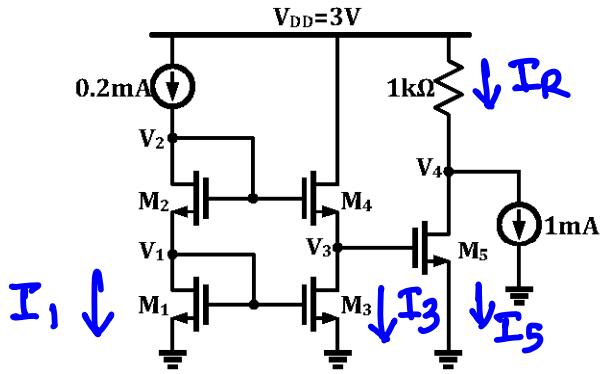

$\frac{W}{L}$ of M_1 = 100/1 $\frac{W}{L}$ of M_2 = 100/1

$\frac{W}{L}$ of M_3 = 1000/1 $\frac{W}{L}$ of M_4 = 1000/1

$\frac{W}{L}$ of M_5 = 500/1

M_1 & M_2 are diode connected $\Rightarrow$ M_1 / M_2 operate in saturation.

$I_1 = 200\mu = \frac{100\mu}{2} \times \frac{100}{1} \times V_{ov1}^2 \Rightarrow V_{ov1} = 0.2 \Rightarrow$ **$V_1 = 1.2V$**

$\left(\frac{W}{L}\right)_2 = \left(\frac{W}{L}\right)_1 \Rightarrow V_{ov2} = V_{ov1} = 0.2V \Rightarrow$ **$V_2 = 2.4V$**

If M_3 operates in saturation : $I_3 = I_1 \times \frac{(W/L)_3}{(W/L)_1} = 2mA$

$\left(\frac{W}{L}\right)_3 = \left(\frac{W}{L}\right)_4 \Rightarrow V_{ov3} = V_{ov4} = 0.2V$

$\Rightarrow V_3 = V_2 - V_T - V_{ov4}$ **$= 1.2V$**

Check: $V_{DS3} = 1.2 > 0.2 \Rightarrow$ M3 is in saturation ✓

$V_{DS4} = 1.8 > 0.2 \Rightarrow$ M4 is in saturation ✓

If M_5 operates in saturation : $V_{ov5} = 1.2 - 1 = 0.2V$

$I_5 = \frac{100\mu}{2} \times \frac{500}{1} \times 0.2^2 = 1mA$

$\Rightarrow I_R = 2mA \Rightarrow V_4 = 3 - 2m \times 1K$ **$= 1V$**

Check : $V_{DS5} = 1V > 0.2V \Rightarrow M_5$ is in saturation. ✓

4. Determine the values of resistors R_1, R_2, and R_3 in the circuit shown below.

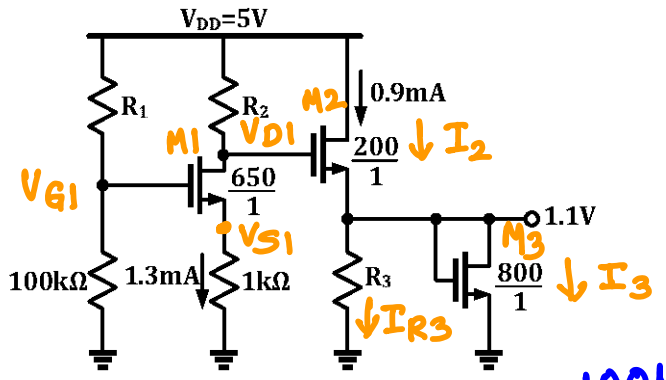

$V_{S1} = 1.3V \Rightarrow 1300\mu = \frac{100\mu}{2} \times \frac{650}{1} \times V_{OV1}^2 \Rightarrow V_{OV1} = 0.2V$

$V_{G1} = V_{S1} + V_T + V_{OV1} = 2.5V$

$\frac{100K}{100K + R_1} \times 5V = 2.5V \Rightarrow \boxed{R_1 = 100\,K\Omega}$

$I_3 = \frac{100\mu}{2} \times \frac{800}{1} \times (0.1)^2 = 0.4mA$

$I_{R3} = 0.9m - 0.4m = 0.5mA \Rightarrow \boxed{R_3 = \frac{1.1}{0.5m} = 2.2\,K\Omega}$

$I_2 = 900\mu = \frac{100\mu}{2} \times \frac{200}{1} \times V_{OV2}^2 \Rightarrow V_{OV2} = 0.3V$

$V_{DS2} = 3.9V > V_{OV2} \Rightarrow$ M2 is in saturation.

$V_{D1} = 1.1 + V_{GS2} = 1.1 + 1 + 0.3 = 2.4V$

$\Rightarrow R_2 = \frac{5 - 2.4}{1.3m} \boxed{= 2\,k\Omega}$

5. Determine value of all the currents I_1, I_2, I_3, and I_4 in the circuit shown below.

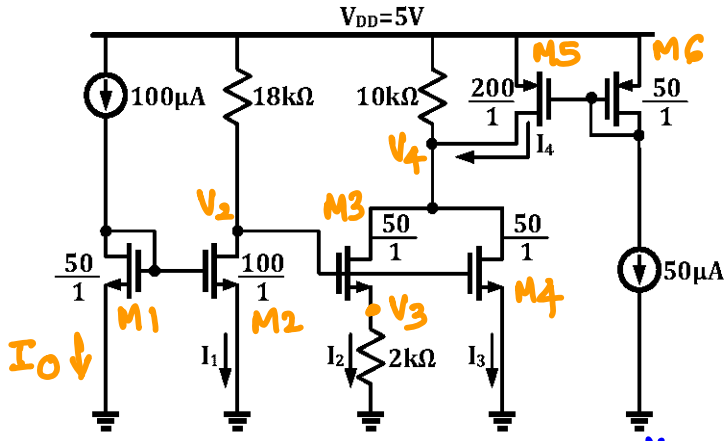

If M_2 operates in saturation : $I_1 = 2I_0 = 200\mu A$ ✓

$\Rightarrow V_2 = 5 - 18k \times 200\mu = 1.4V \Rightarrow$ M2 is in saturation

If M_4 operates in saturation: $I_3 = \frac{100\mu}{2} \times \frac{50}{1} \times (0.4)^2$

$\Rightarrow I_3 = 400\mu A$

$I_2 = \frac{V_3}{2k} = \frac{100\mu}{2} \times \frac{50}{1} \times (1.4 - V_3 - 1)^2 \Rightarrow 5V_3^2 - 5V_3 + 0.8 = 0$

$\Rightarrow V_3 = 0.2V$ or $0.8V$

V_3 cannot be 0.8V because it implies M_3 is cut off but we know M_3 is not cut off $\Rightarrow V_3 = 0.2V$

$I_2 = \frac{0.2}{2k} = 100\mu A$

$I_4 = 4 \times 50\mu = 200\mu A$

Check: $V_4 = 5 - 10k(I_2 + I_3 - I_4) = 2V \Rightarrow M_4$ & M_3 operate in saturation ✓

6. Determine value of all the currents I_1, I_2, I_3, and I_4 in the circuit shown below.

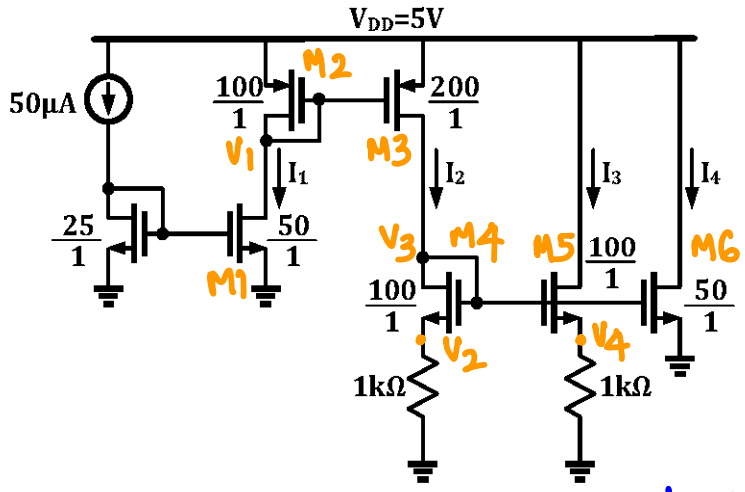

If M_1, M_3, M_5 operate in saturation then:

$I_1 = 2 \times 50\mu = 100\mu A$

$I_2 = 2 \times 100\mu = 200\mu A$

$I_3 = I_2 = 200\mu A$ ($\because M_4$ & M_5 have same size & V_{GS})

$V_2 = I_2 \times 1K\Omega = 0.2V \Rightarrow V_3 = V_2 + V_{GS4} = V_2 + V_{OV4} + V_T$

$I_D(M_4) = 200\mu = \frac{100\mu}{2} \times \frac{100}{1} \times V_{OV4}^2 \Rightarrow V_{OV4} = 0.2V$

$\Rightarrow V_3 = 1.4V \Rightarrow I_4 = \frac{100\mu}{2} \times \frac{50}{1} \times (0.4)^2 = 400\mu A$

Checks: $V_1 = 5 - 1.2 = 3.8V \Rightarrow M_1$ is in saturation ✓

$|V_{OV3}| = 0.2V < |V_{DS3}| = 3.6V \Rightarrow M_3$ is in saturation ✓

$V_{DS5} = 5 - V_4 = 5 - V_2 = 4.8V > V_{OV5}$

$\Rightarrow M_5$ is in saturation ✓