NMOS: $\mu_n C_{OX} = 100\mu A/V^2; V_{TH} = 1V$
PMOS: $\mu_p C_{OX} = 50\mu A/V^2; |V_{TH}| = 1V$

1. Determine region of operation of all transistors shown below.

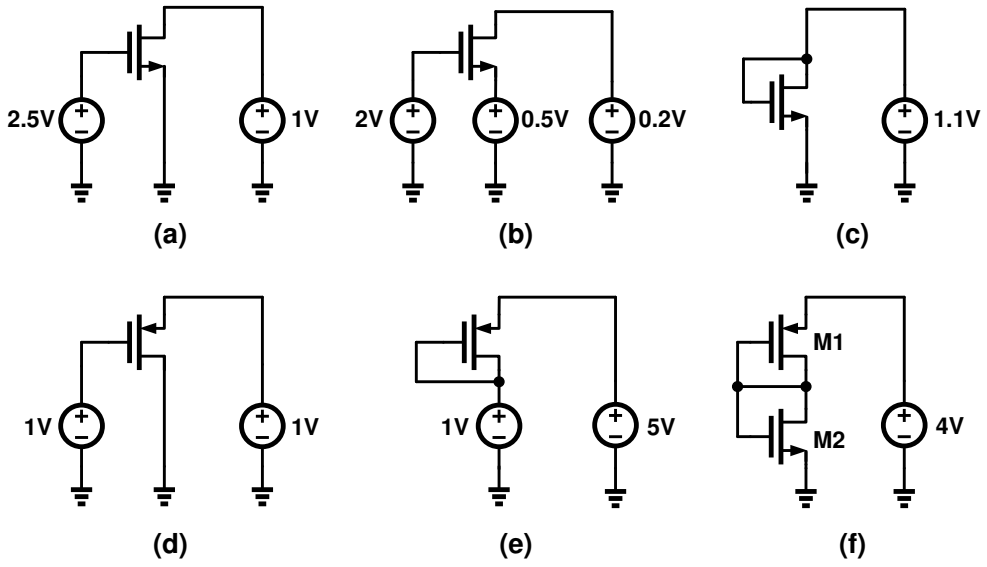

2. Assuming $V_{DD} = 5V$ in the circuit shown below, perform the following.

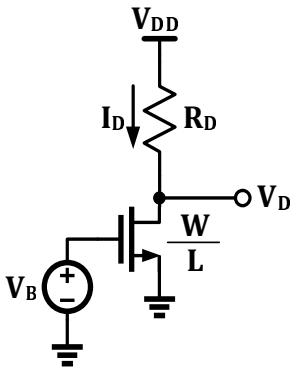

a. Given $V_B = 1.2V$, $W/L = 250$, and $R_D = 2K\Omega$, calculate V_D and I_D.

b. Given $V_B = 1.2V$ and $W/L = 250$, what value of R_D places the transistor at the edge of saturation (i,e. $V_{DS} = V_{GS} - V_{TH}$)?

c. Given $V_B = 1.2V$ and $R_D = 2K\Omega$, what values of W/L places the transistor at the edge of saturation?

d. Given $R_D = 2K\Omega$ and $W/L = 500$, what is the maximum allowable value of V_B, if the transistor must remain in saturation?

e. Given $V_B = 1.2V$, $W/L = 250$, and $R_D = 2K\Omega$, calculate the change in drain voltage, ΔV_D, when the gate voltage, V_B, is changed by 1mV.

f. Repeat part (e) when R_D is changed to $4K\Omega$.

g. Repeat part (e) when W/L is changed to $W/L = 1000$.

3. Calculate node voltages V_1, V_2, V_3, and V_4 in the circuit shown below.

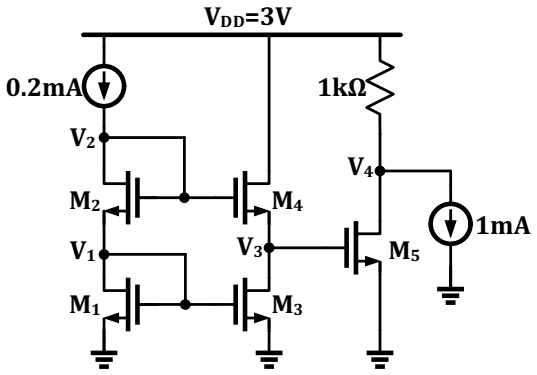

$\frac{W}{L}$ of M_1 = 100/1 $\frac{W}{L}$ of M_2 = 100/1

$\frac{W}{L}$ of M_3 = 1000/1 $\frac{W}{L}$ of M_4 = 1000/1

$\frac{W}{L}$ of M_5 = 500/1

4. Determine the value of resistors R_1, R_2, and R_3 in the circuit shown.

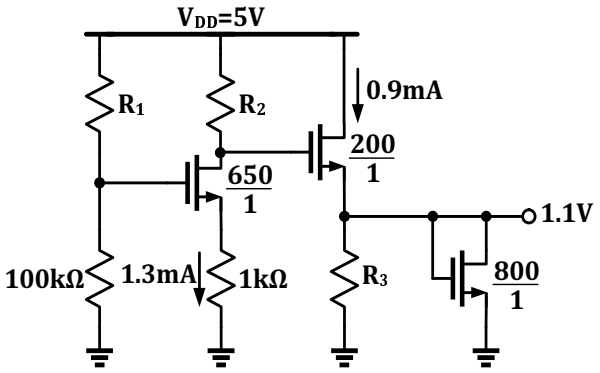

5. Determine the value of currents I_1, I_2, I_3, and I_4 in the circuit shown below.

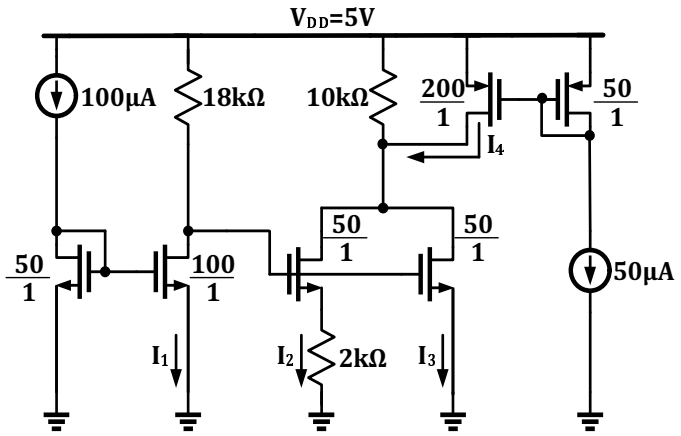

6. Determine the value of currents I_1, I_2, I_3, and I_4 in the circuit shown below.

