1. Construct Thevenin equivalent model of the circuit shown below and determine expressions for Thevenin voltage, V_{TH} and Thevenin resistance, R_{TH}.

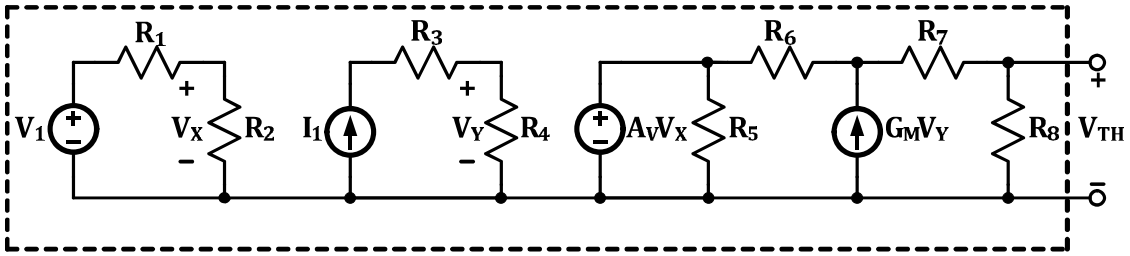

Thevenin resistance :

Null all independent sources : $V_1 \rightarrow$ short $\Rightarrow V_x = 0$

$I_1 \rightarrow$ open $\Rightarrow V_y = 0$

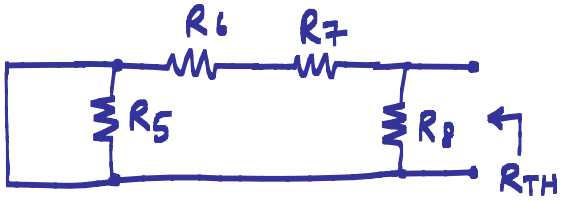

$$R_{TH} = R_8 \,||\, (R_6 + R_7)$$

Thevenin voltage :

Using superposition : $V_{TH} = V_{TH}\big|_{V_1=0} + V_{TH}\big|_{I_1=0}$

$$V_{TH}\big|_{V_1=0} = G_m V_y \cdot \frac{R_6}{R_6+R_7+R_8} \cdot R_8 \quad ; \quad V_y = I_1 \cdot R_4$$

$$= G_m \frac{R_4 R_6 R_8}{R_6+R_7+R_8} \cdot I_1$$

$$V_{TH}\big|_{I_1=0} = A_V \cdot V_x \cdot \frac{R_8}{R_6+R_7+R_8} \quad ; \quad V_x = \frac{R_2}{R_1+R_2} \cdot V_1$$

$$= A_V \frac{R_2 R_8}{(R_1+R_2)(R_6+R_7+R_8)} \cdot V_1$$

$$V_{TH} = G_m \frac{R_4 R_6 R_8}{R_6+R_7+R_8} \cdot I_1 + A_V \frac{R_2 R_8}{(R_1+R_2)(R_6+R_7+R_8)} \cdot V_1$$

2. Calculate output voltage, V_{OUT}, in terms of input voltages, V_1, V_2, and V_3.

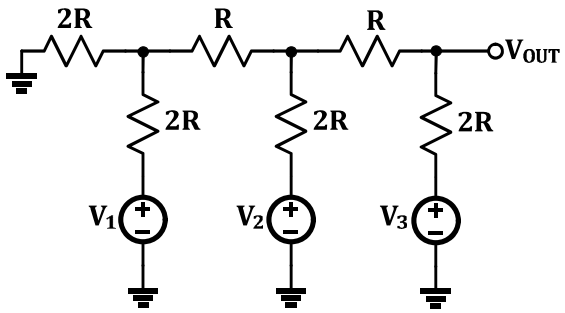

$$V_{OUT} = V_{OUT}\Big|_{V_1=V_2=0} + V_{OUT}\Big|_{V_1=V_3=0} + V_{OUT}\Big|_{V_2=V_3=0}$$

$$V_{OUT3} = V_{OUT}\Big|_{V_1=V_2=0}$$

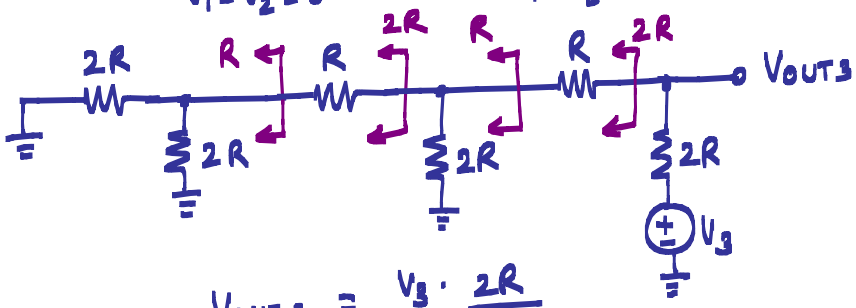

$$V_{OUT3} = V_3 \cdot \frac{2R}{2R+2R} = V_3/2$$

$$V_{OUT2} = V_{OUT}\Big|_{V_1=V_3=0}$$

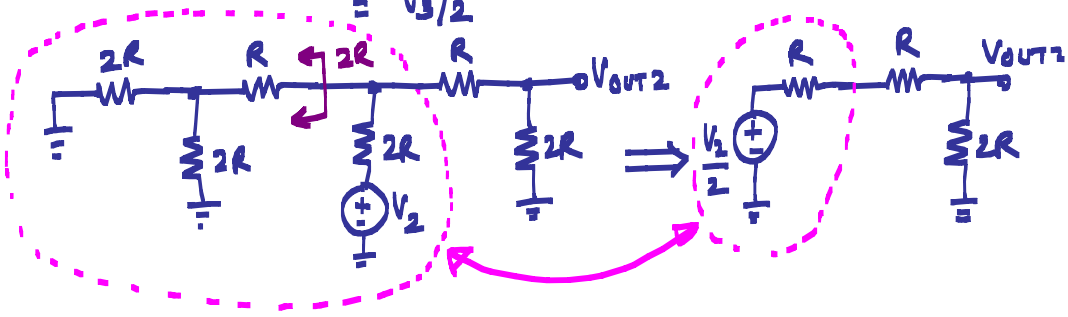

$$V_{OUT2} = \frac{V_2}{2} \cdot \frac{1}{2} = \frac{V_2}{4}$$

$$V_{OUT1} = V_{OUT}\Big|_{V_2=V_3=0}$$

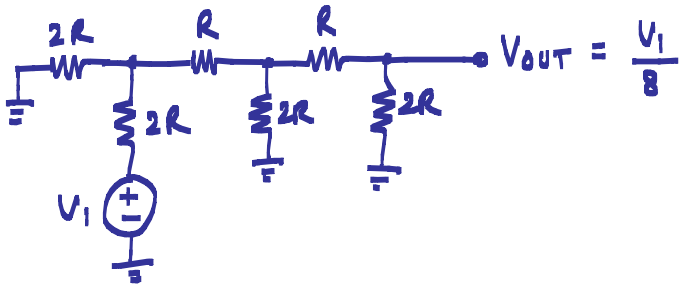

$$V_{OUT} = \frac{V_1}{8}$$

$$\boxed{V_{OUT} = \frac{V_1}{8} + \frac{V_2}{4} + \frac{V_3}{2}}$$

3. Find the value of capacitor C_X in terms of constant K and C if the two circuits shown in part (a) are equivalent. Similarly, determine the value of resistor R_X in terms of K and R for part (b).

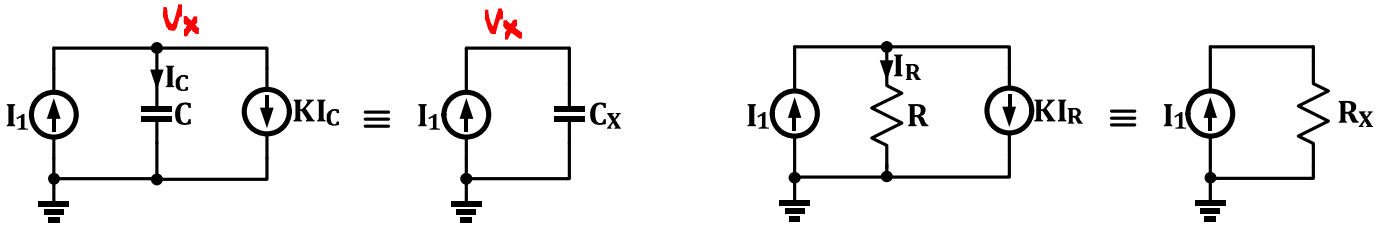

(a) **(b)**

(a) If the two circuits are identical then V_x should be same in both circuits

$$\Rightarrow \frac{I_c}{sC} = \frac{I_1}{sC_x} \Rightarrow \frac{I_1}{(K+1)sC} = \frac{I_1}{sC_x} \Rightarrow \boxed{C_x = (K+1)C}$$

* This is a capacitance multiplier circuit!

(b) $I_R \cdot R = I_1 \cdot R_x \Rightarrow (K+1)I_1 \cdot R = I_1 \cdot R_x \Rightarrow \boxed{R_x = \frac{R}{K+1}}$

* This is a resistance scaler circuit!

4. Determine voltage gain, $A_v = \frac{v_2}{v_1}$, for the two circuits shown below.

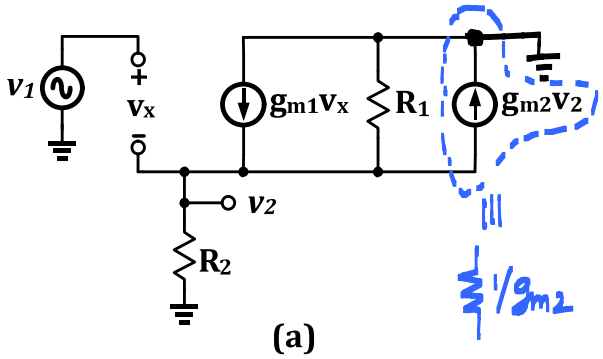

(a)

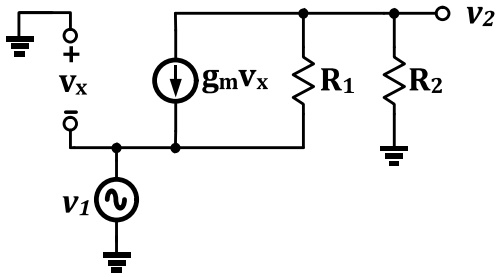

(b)

(a)

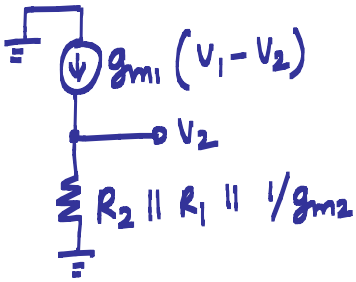

$\Rightarrow$

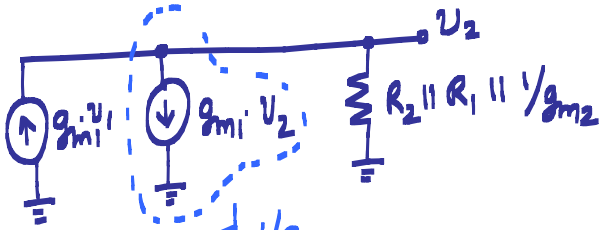

$\Rightarrow$

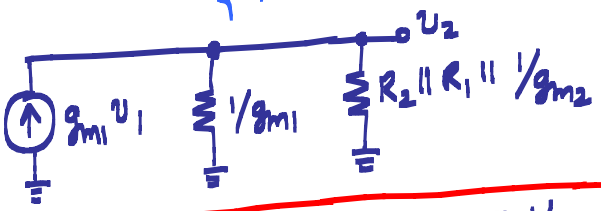

$\Rightarrow$

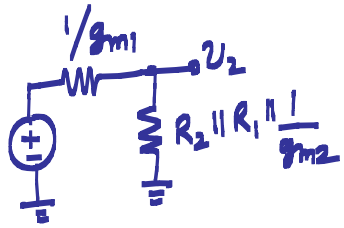

$$A_v = \frac{v_2}{v_1} = \frac{R_2 \parallel R_1 \parallel 1/g_{m2}}{R_2 \parallel R_1 \parallel 1/g_{m2} + 1/g_{m1}}$$

(b) $v_x = -v_1 \Rightarrow \left[g_{m1} \cdot v_1 + \frac{v_1 - v_2}{R_1} \right] \cdot R_2 = v_2$

$$\Rightarrow v_2 (R_1 + R_2) = v_1 (R_2 + R_2 g_{m1} R_1)$$

$$\Rightarrow A_v = \frac{v_2}{v_1} = \frac{R_2 (1 + g_{m1} R_1)}{R_1 + R_2}$$