Lecture 22

CE stage with emitter degeneration :

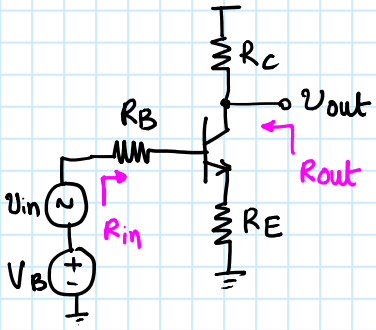

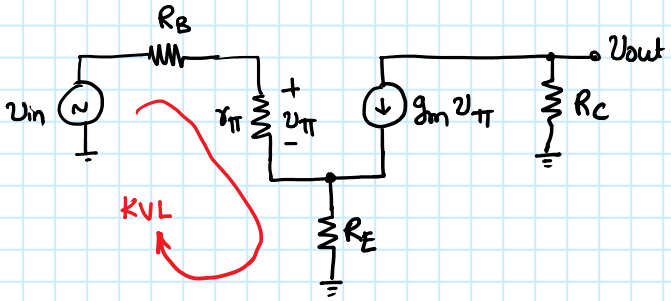

Assume $r_o = \infty$ (will include later)

$$v_{in} = \frac{g_m v_\pi}{\beta}(R_B + r_\pi) + g_m v_\pi \left(1 + \frac{1}{\beta}\right) R_E$$

$$v_{out} = -g_m v_\pi \cdot R_C \Rightarrow v_\pi = -\frac{v_{out}}{g_m R_C}$$

$$\Rightarrow v_{in} = \left[\frac{g_m (R_B + r_\pi)}{\beta} + g_m \left(\frac{1+\beta}{\beta}\right) R_E\right] \cdot -\frac{v_{out}}{g_m R_C}$$

$$\Rightarrow A_v = -\frac{v_{out}}{v_{in}} = \frac{-g_m R_C}{\frac{g_m (R_B + r_\pi)}{\beta} + g_m \left(\frac{1+\beta}{\beta}\right) \cdot R_E}$$

if $\beta >> 1$ $\quad A_v \approx \dfrac{-g_m R_C}{\frac{g_m (R_B + r_\pi)}{\beta} + g_m R_E}$

Special case : if $R_B = 0$

$$A_v \approx \frac{-g_m R_C}{\frac{g_m r_\pi}{\beta} + g_m R_E} = \frac{-g_m R_C}{1 + g_m R_E}$$

Input impedance (R_{in})

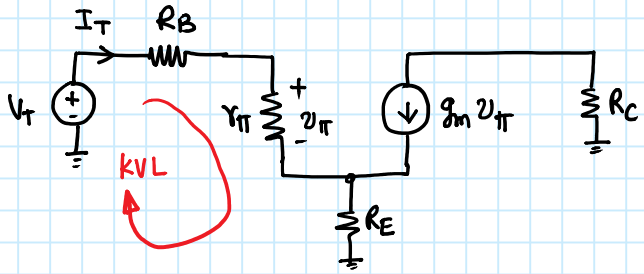

$$V_T = I_T (R_B + r_\pi) + (\beta + 1) I_T R_E$$

$$\Rightarrow R_{in} = \frac{V_T}{I_T} = (R_B + r_\pi) + (\beta + 1) R_E$$

Output impedance (Rout):

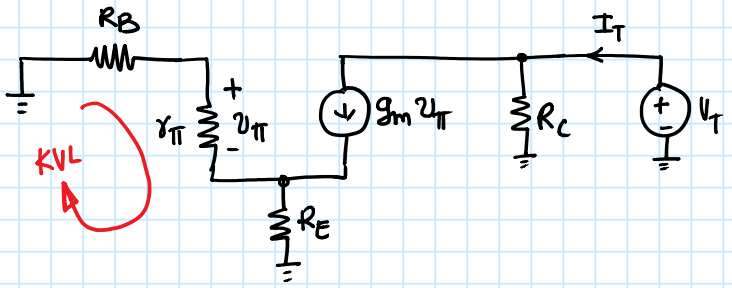

$$I_T = \frac{V_T}{R_C} + g_m v_\pi$$

$$0 = \frac{g_m v_\pi}{\beta} \cdot (R_B + r_\pi) + g_m v_\pi \left(1 + \frac{1}{\beta}\right) \cdot R_E$$

$$\Rightarrow v_\pi = 0$$

$$R_{out} = \frac{V_T}{I_T} = R_C$$

Rout when $r_o \neq \infty$:

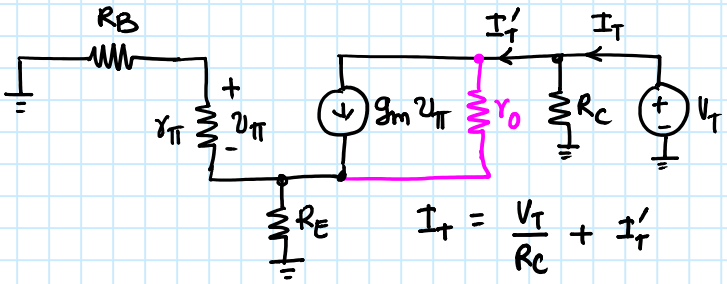

$$I_T = \frac{V_T}{R_C} + I_T'$$

$$V_T = \left(I_T' - g_m \cdot v_\pi\right) r_o + I_T' \left[R_E \,\|\, (R_B + r_\pi)\right]$$

$$v_\pi = -I_T' \cdot \frac{R_E}{R_E + R_B + r_\pi} \cdot r_\pi$$

$$= \left[I_T' + g_m I_T' \cdot \frac{R_E \cdot r_\pi}{R_E + R_B + r_\pi}\right] r_o + I_T' \left[R_E \,\|\, (R_B + r_\pi)\right]$$

$$\Rightarrow R_{out}' = \frac{V_T}{I_T'} = \left[1 + g_m \frac{R_E r_\pi}{R_E + R_B + r_\pi}\right] r_o + R_E \,\|\, (R_B + r_\pi)$$

if $R_B = 0$

$$R_{out}' = \left[1 + g_m (R_E \,\|\, r_\pi)\right] r_o + (R_E \,\|\, r_\pi)$$

$$= r_o + (1 + g_m r_o)(R_E \,\|\, r_\pi)$$