# Lecture 17 ( CS/CG/CD stages)

## Common source amplifier w/ degeneration :

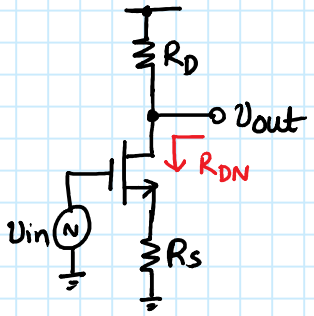


$$G_m = \frac{g_m}{1+g_m R_S}$$

if $g_m R_S \gg 1$

then $G_m \approx \frac{1}{R_S}$

$\Rightarrow$ $G_m$ is independent of transistor parameters!

$$R_{DN} = r_{ds} + R_S + g_m r_{ds} R_S$$

$R_S$ appears "$g_m r_{ds}$" times larger when seen from drain

## Common gate amplifier :

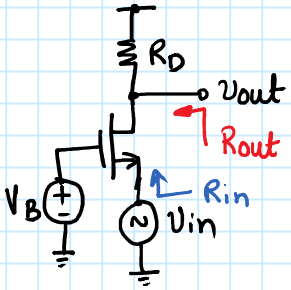


$$R_{out} = R_D \parallel r_{ds}$$

### $G_m$ calculation:

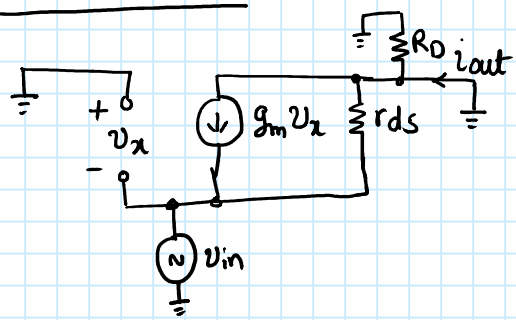


$$i_{out} = -\frac{v_{in}}{r_{ds}} + g_m \cdot (-v_{in}) \Rightarrow G_m = g_m \text{ if } g_m r_{ds} \gg 1$$

### Rin Calculation:

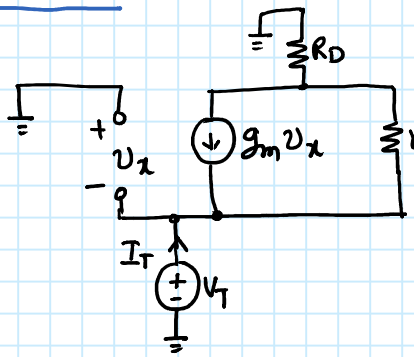


$$I_T = g_m V_T + \frac{(V_T - I_T R_D)}{r_{ds}}$$

$$I_T (r_{ds} + R_D) = V_T \cdot g_m \cdot r_{ds}$$

$$\Rightarrow R_{in} = \frac{1}{g_m}\left[1 + \frac{R_D}{r_{ds}}\right]$$

**Note:** $R_{in} \approx \frac{1}{g_m}$ only if $r_{ds} \gg R_D$

If $R_D$ is replaced with ideal current source $R_{in} = \infty$ !

## Common gate amplifier with source resistance:

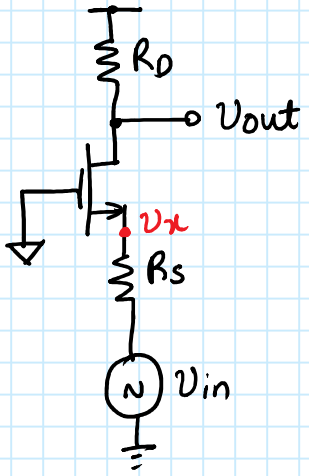


$$v_x = \left.\frac{1/g_m \parallel r_{ds}}{(1/g_m \parallel r_{ds}) + R_S}\right|_{v_{out}=0} \approx \frac{1}{1+g_m R_S} \quad \text{if } \frac{1}{g_m} \ll r_{ds}$$

$$G_m \approx \frac{g_m}{1+g_m R_S}$$

$$R_{in} = R_S + \frac{1 + R_D/r_{ds}}{g_m + 1/r_{ds}} \approx R_S + \frac{1}{g_m}\left(1 + \frac{R_D}{r_{ds}}\right)$$

$$R_{out} = R_D \parallel \left(r_{ds} + R_S + g_m r_{ds} \cdot R_S\right)$$

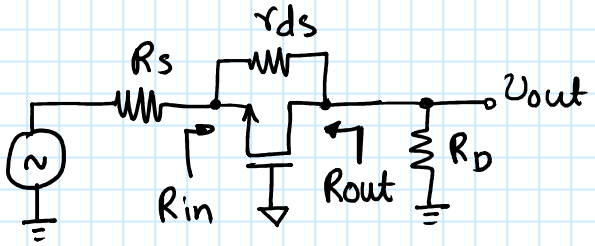


$$R_{in} = \frac{r_{ds} + R_D}{1 + g_m' r_{ds}} \approx \frac{1}{g_m'} + \frac{R_D}{g_m' r_{ds}}$$

$$= R_{in}\Big|_{R_D=0} + \frac{R_D}{g_m' r_{ds}}$$

$\Rightarrow$ Resistance at the drain, $R_D$, appears $g_m' r_{ds}$ times smaller when looked from the source

$$R_{out} = r_{ds} + R_S + g_m' \cdot r_{ds} \cdot R_S$$

$$\approx g_m' R_S r_{ds} \quad \text{if } g_m' R_S \gg 1 \;\&\; g_m' r_{ds} \gg 1$$

$$= \left(g_m' r_{ds}\right) \cdot R_S$$

$\Rightarrow$ Source resistance, $R_S$, appears $g_m' r_{ds}$ times larger when looked from the drain

Note: CG amplifier acts as an impedance scaler

# Common drain amplifier (a.k.a source follower/level shifter)

$G_m = -g_m \quad R_{out} = R_L \parallel R_{up}$

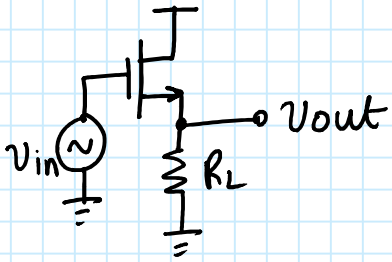


$$R_{up} = \frac{1}{g_m + \frac{1}{r_{ds}}}$$

$$\Rightarrow R_{up} \approx 1/g_m$$

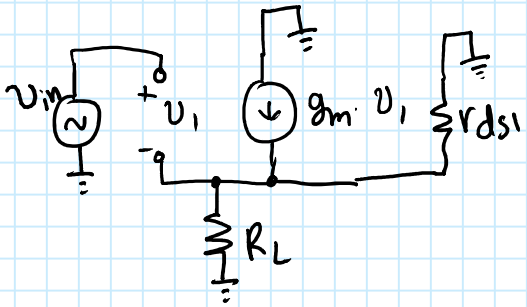


$\Rightarrow$

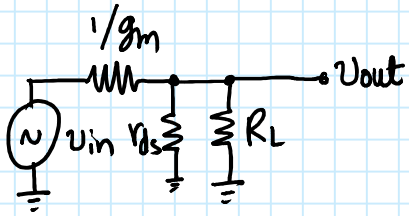


$$\Rightarrow \frac{v_{out}}{v_{in}} = \frac{R_L \parallel r_{ds}}{(R_L \parallel r_{ds}) + \frac{1}{g_m}}$$

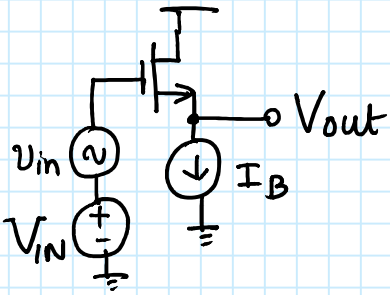


$$I_D = \frac{\mu_n C_{ox}}{2} \cdot \left(\frac{W}{L}\right) \left[ V_{IN} + v_{in} - V_{OUT} - v_{out} - V_T \right]^2$$

$$= \frac{\mu_n C_{ox}}{2} \cdot \frac{W}{L} \left[ V_{IN} - V_{OUT} - V_T + v_{in} - v_{out} \right]^2$$

$I_D = I_B$ for any input voltage

$\Rightarrow v_{in} - v_{out} = 0 \Rightarrow v_{out}$ "follows" $v_{in}$

$\Rightarrow$ Hence CD configuration is referred as source follower

Denoting $I_B = \frac{\mu_n C_{ox}}{2} \cdot \frac{W}{L} \cdot V_{OV}^2$

$$V_{out} = V_{in} - (V_T + V_{OV})$$

$\Rightarrow$ Vout is shifted down from Vin by $V_T + V_{OV}$

$\Rightarrow$ Hence CD configuration is also referred to as level shifter