Lecture 16 [Examples]

Examples: (Assume all transistors are biased in saturation)

(i)

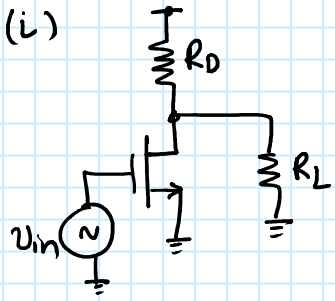

$G_M = g_m$

$R_{OUT} = R_D \parallel r_{ds} \parallel R_L$

$A_V = -G_M R_{OUT}$

(ii)

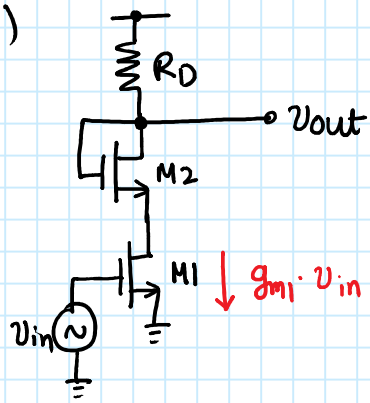

$G_M = g_{m1}$

$R_{OUT} = R_D \parallel \left[\left(\frac{1}{g_{m2}} \parallel r_{ds2}\right) + r_{ds1}\right] \approx R_D \parallel \left[\frac{1}{g_{m2}} + r_{ds1}\right]$ if $g_{m2} r_{ds2} \gg 1$

Because:  $R_{DIODE} = \frac{1}{g_m} \parallel r_{ds}$

Proof:

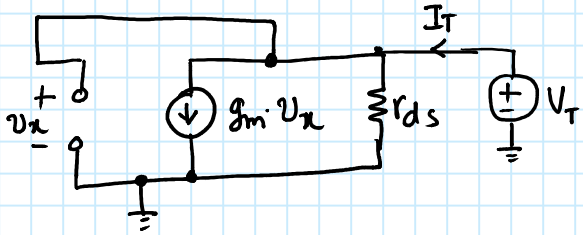

$R_{DIODE} = \frac{V_T}{I_T} = \frac{1}{g_m} \parallel r_{ds}$

(iii)

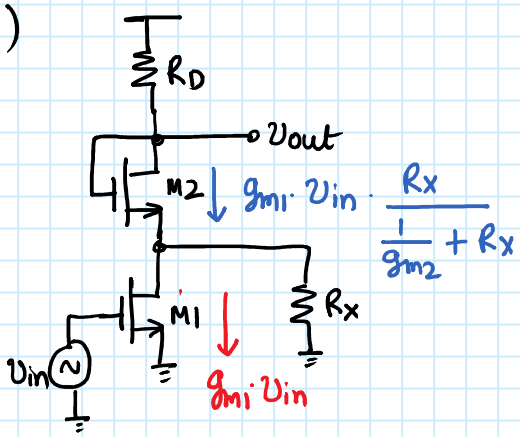

$G_m = g_{m1} \cdot \frac{R_x}{\frac{1}{g_{m2}} + R_x}$ assuming $g_{m2} r_{ds2} \gg$

$R_{OUT} = R_D \parallel \left[\frac{1}{g_{m2}} + \left(r_{ds1} \parallel R_x\right)\right]$

(iv)

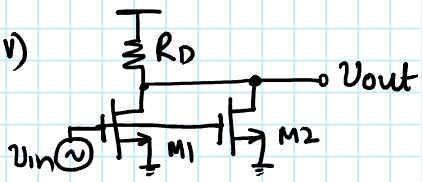

$G_M = g_{m1} + g_{m2}$

$R_{OUT} = R_D \parallel r_{ds1} \parallel r_{ds2}$

Common-source amplifier with degeneration:

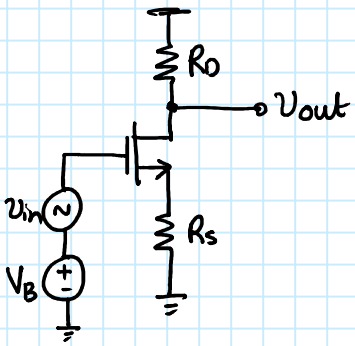

Method #1:

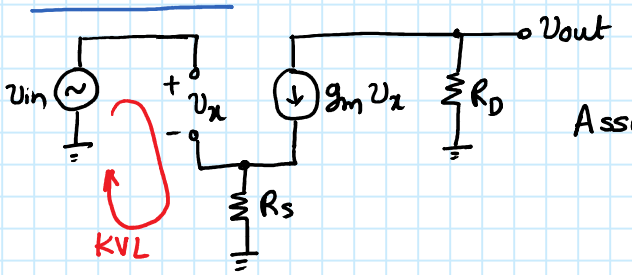

Assumption: $r_{ds} = \infty$

KVL: $v_{in} = v_x + g_m v_x \cdot R_s$

$$\Rightarrow v_x = \frac{1}{1+g_m R_s} \cdot v_{in}$$

$$v_{out} = -g_m \cdot v_x \cdot R_D$$

$$\Rightarrow \boxed{A_v = \frac{v_{out}}{v_{in}} = \frac{-g_m}{1+g_m R_s} \cdot R_D}$$

Can repeat above analysis with $r_{ds} \neq \infty$

Method #2: Calculate $A_v = -G_m R_{out}$

G_m calculation:

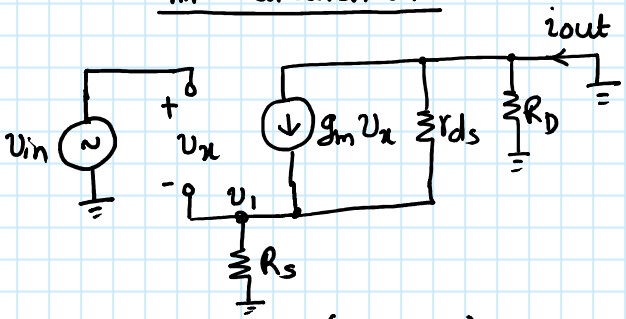

$$i_{out} = g_m \cdot (v_{in} - v_1) - \frac{v_1}{r_{ds}}$$

$$= g_m \cdot v_{in} - i_{out} R_s \underbrace{\left(g_m + \frac{1}{r_{ds}}\right)}_{\approx g_m}$$

$$\Rightarrow i_{out} \approx g_m \cdot v_{in} - i_{out} \cdot g_m R_s$$

$$\Rightarrow \boxed{G_m = \frac{g_m}{1+g_m R_s}}$$

R_{out} calculation

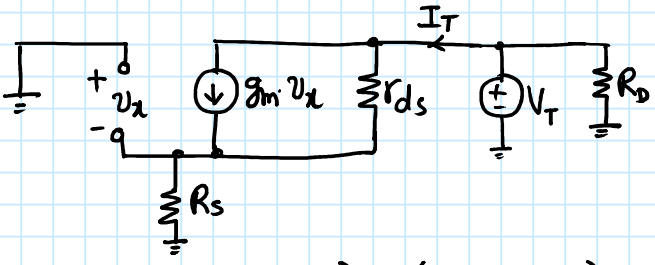

$$I_T = g_m (0 - I_T R_s) + \frac{(V_T - I_T R_s)}{r_{ds}}$$

$$\Rightarrow I_T \left[r_{ds} + R_s + g_m r_{ds} R_s\right] = V_T$$

$$\frac{V_T}{I_T} = R_{OUT} = r_{ds} + R_s + g_m r_{ds} R_s$$

$$\Rightarrow \boxed{R_{OUT} = R_D \parallel (r_{ds} + R_s + g_m r_{ds} R_s)}$$