Lectures 11 & 12 (common source amplifier gain)

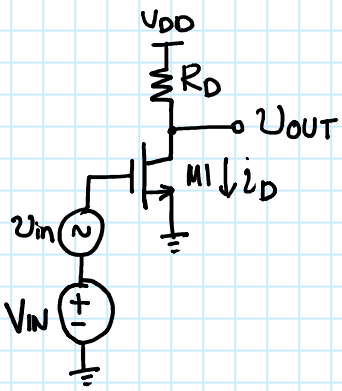

Method #2: Incremental gain calculation using first principles

Notation:

$$v_{IN} = V_{IN} + v_{in}$$
$$v_{OUT} = V_{OUT} + v_{out}$$
$$i_D = I_D + i_d$$

V_{IN}, V_{OUT}, I_D: DC operating point

v_{in}, v_{out}, i_d: incremental quantities

$$V_{OUT} = V_{DD} - \frac{\mu_n C_{ox}}{2} \cdot \frac{W}{L} \cdot (V_{IN} - V_T)^2 \cdot R_D \quad \text{— (1)}$$

$$v_{OUT} = V_{DD} - \frac{\mu_n C_{ox}}{2} \cdot \frac{W}{L} \cdot (v_{IN} - V_T)^2 \cdot R_D$$

$$\Rightarrow V_{OUT} + v_{out} = V_{DD} - \frac{\mu_n C_{ox}}{2} \cdot \frac{W}{L} \cdot (V_{IN} + v_{in} - V_T)^2 \cdot R_D \quad \text{— (2)}$$

$$(2) - (1) \Rightarrow v_{out} = -\mu_n C_{ox} \frac{W}{L} \cdot (V_{IN} - V_T) \cdot v_{in} \left[1 + \frac{v_{in}}{2(V_{IN} - V_T)}\right] R_D$$

$$\approx -\mu_n C_{ox} \frac{W}{L} \cdot (V_{IN} - V_T) \cdot v_{in} \cdot R_D \quad \text{if } v_{in} \ll 2(V_{IN} - V_T)$$

$$\boxed{v_{out} = -g_m \cdot v_{in} \cdot R_D}$$

$$\boxed{\text{Incremental gain: } A_v = \frac{v_{out}}{v_{in}} = -g_m R_D} \quad \text{if M1 operates in saturation \& } v_{in} \ll 2(V_{IN} - V_T)$$

Equivalent expressions for g_m

$$\boxed{g_m = \mu_n C_{ox} \frac{W}{L} \cdot (V_{GS} - V_T)}$$

$$\boxed{g_m = \frac{2I_D}{V_{GS} - V_T} = \frac{2I_D}{V_{OV}}} \Rightarrow A_v = -g_m R_D = -\frac{2 I_D R_D}{V_{OV}}$$

$$\boxed{g_m = \sqrt{2 \mu_n C_{ox} \left(\frac{W}{L}\right) I_D}}$$

Method #3 : Incremental gain calculation using incremental model

Incremental model of a MOSFET

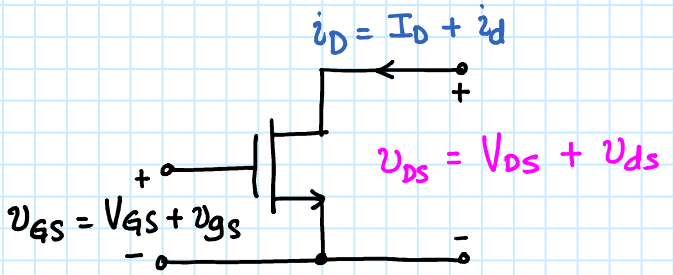

$$i_D = f(v_{GS}) \approx f(v_{GS})\Big|_{v_{GS}=V_{GS}} + f'(v_{GS})\Big|_{v_{GS}=V_{GS}} \cdot v_{gs}$$

$f(v_{GS})\Big|_{v_{GS}=V_{GS}} = I_D$

$f'(v_{GS})\Big|_{v_{GS}=V_{GS}} = \mu_n C_{ox}\frac{W}{L}(V_{GS}-V_T) = g_m$

$$\Rightarrow I_D + i_D = I_D + g_m \cdot v_{gs}$$

$$\Rightarrow \boxed{i_D = g_m \cdot v_{gs}}$$

Incremental model of common source amplifier

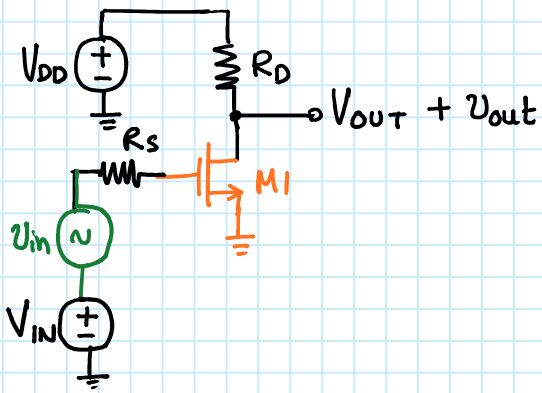

$\Rightarrow$

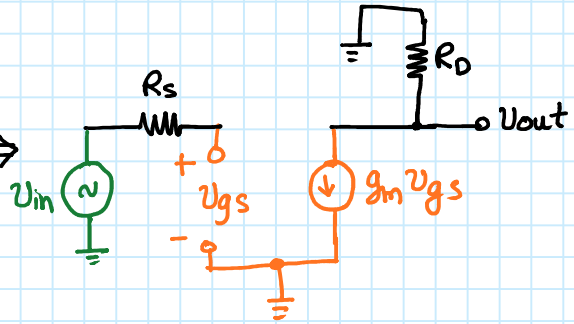

$$v_{out} = -g_m \cdot v_{gs} \cdot R_D$$

$$v_{gs} = v_{in}$$

$$\Rightarrow v_{out} = -g_m \cdot R_D \cdot v_{in}$$

$$\Rightarrow \boxed{A_v = \frac{v_{out}}{v_{in}} = -g_m R_D}$$

$\Rightarrow$ Source common to both input & output, hence common source amplifier

- Remember transistor M1 must operate in saturation
  - $\Rightarrow$ Need to choose operating point (V_{GS1}, V_{DS1}, I_{D1}) carefully
  - or Need : $V_{DS} \geq V_{GS} - V_T \geq V_{ov}$ (V_{dsat})

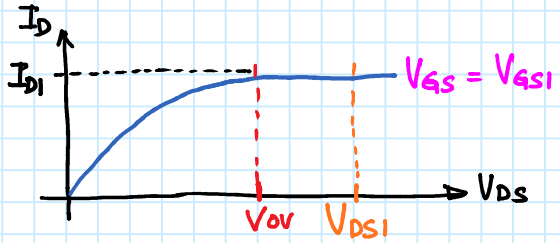

$$A_v = -g_m R_D = -\frac{2I_D}{V_{OV}} \cdot R_D$$

Design Procedure

Choose I_D & V_{OV} to achieve desired g_m.

Example: for $A_v = 10$, $R_D = 5k\Omega$: $g_m = 2mA/V$

One possibility : $V_{OV} = 0.2V$ & $I_D = 200\mu A$

$\Rightarrow V_{GS} = 1.2V$ & $I_D = 200\mu A$

from $I_D = \frac{\mu_n C_{ox}}{2} \cdot \frac{W}{L} \cdot V_{OV}^2$ calculate W/L

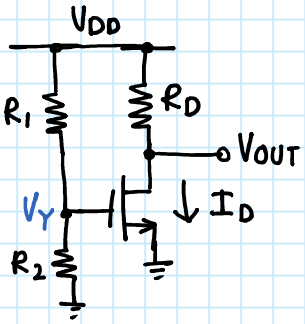

→ Set desired V_{GS} using V_{DD} and resistor divider

$$V_Y = V_{GS} = \frac{R_2}{R_1 + R_2} \cdot V_{DD}$$

Remaining question: How can we add incremental voltage v_{in} to V_Y (V_{GS})?

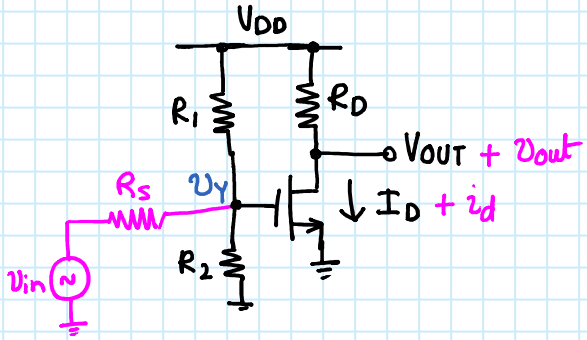

$$v_Y = \frac{R_2 \parallel R_S}{R_1 + (R_2 \parallel R_S)} \cdot V_{DD} + \frac{R_1 \parallel R_2}{R_S + (R_1 \parallel R_2)} \cdot v_{in}$$

$$\neq \frac{R_2}{R_1 + R_2} \cdot V_{DD} + v_{in} \quad \text{(desired)}$$

$\Rightarrow$ Want no DC current through R_S

$\Rightarrow$ Block DC current using a capacitor C_B

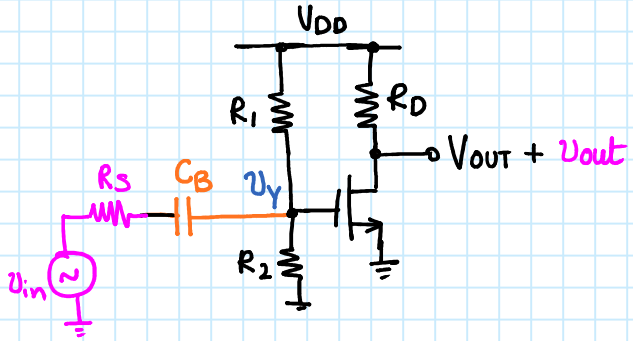

$$R_S' = R_S + \frac{1}{\omega C_B}$$

$$\approx R_S \quad \text{if} \quad R_S \gg \frac{1}{\omega C_B}$$

for all frequencies of interest

$\Rightarrow$ Choose $C_B = \frac{1}{R_S \cdot \omega_{min}}$

where ω_{min} is the minimum frequency of interest

For simplicity we will assume $C_B = \infty$ (very very large)

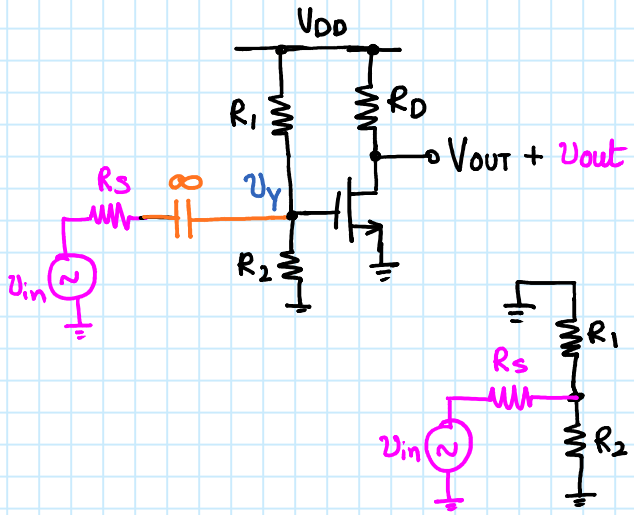

$$v_Y = V_Y + v_y$$

$$V_Y = \frac{R_2}{R_1 + R_2} \cdot V_{DD}$$

v_y can be calculated using incremental model

$$v_y = \frac{R_1 \parallel R_2}{R_S + (R_1 \parallel R_2)} \cdot v_{in}$$

Complete incremental model:

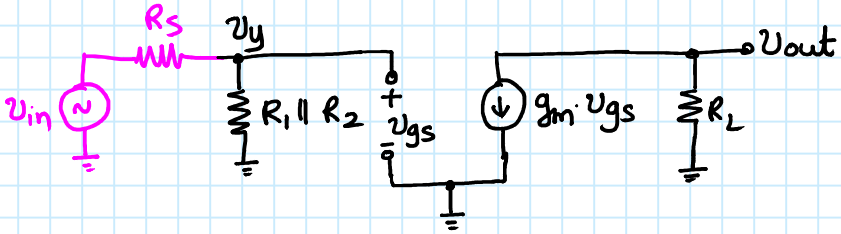

$$i_d = g_m \cdot v_{gs} = g_m \cdot \frac{R_1 \parallel R_2}{R_S + (R_1 \parallel R_2)} \cdot v_{in}$$

$$v_{out} = -g_m \cdot v_{gs} \cdot R_L$$

$$= -g_m \cdot \frac{R_1 \parallel R_2}{R_S + (R_1 \parallel R_2)} \cdot R_L \cdot v_{in}$$

$$\Rightarrow \boxed{A_v = \frac{v_{out}}{v_{in}} = -g_m \cdot \frac{R_1 \parallel R_2}{R_S + (R_1 \parallel R_2)} \cdot R_L}$$

Practical considerations:

#1 : Choose R_1 & R_2 such that $R_1 \parallel R_2 \gg R_S$

$$\Rightarrow v_y = v_{in}$$

& $A_v \simeq -g_m \cdot R_L$

#2 : Output loading effects both DC operating point & incremental gain.