Lecture 10 (common source stage)

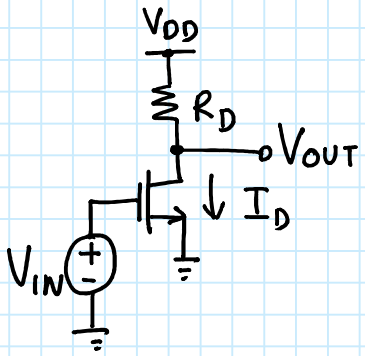

DC "operating point" calculation: Find V_{OUT} & I_D

Want transistor to operate in saturation for large gain (more on this later)

$$\Rightarrow I_D = \frac{\mu_n C_{ox}}{2} \cdot \frac{W}{L} \cdot (V_{IN} - V_T)^2 \quad \text{— (1)}$$

$$I_D = \frac{V_{DD} - V_{OUT}}{R_D} \quad \text{— (2)}$$

Solve (1) and (2) to find I_D & V_{OUT}

Graphical method for calculation of DC operating point:

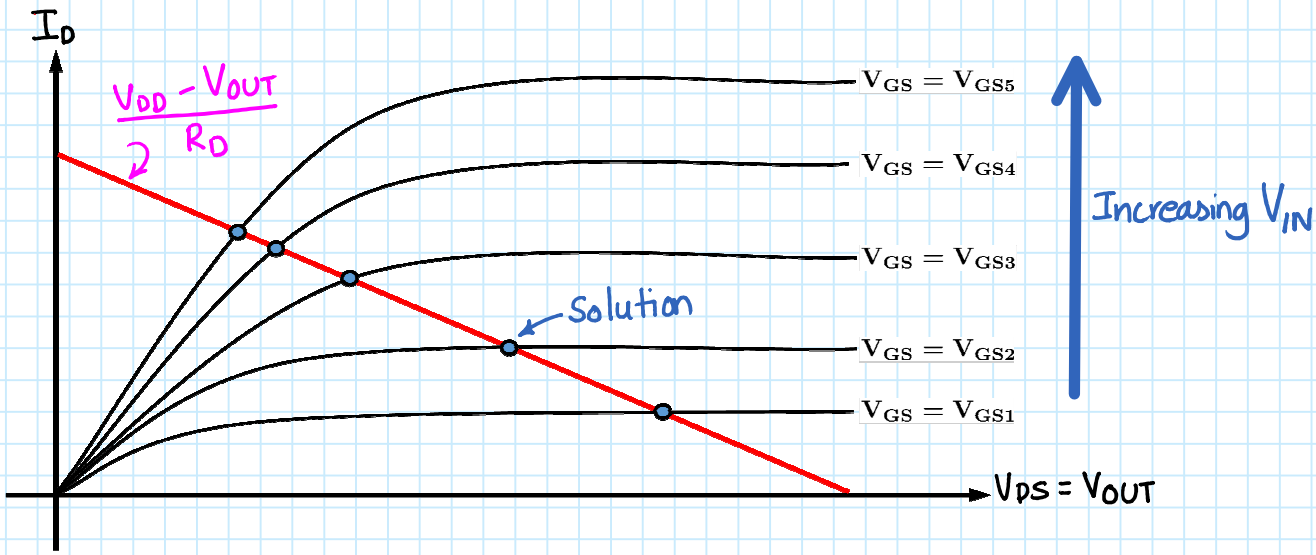

Input / Output Characteristic:

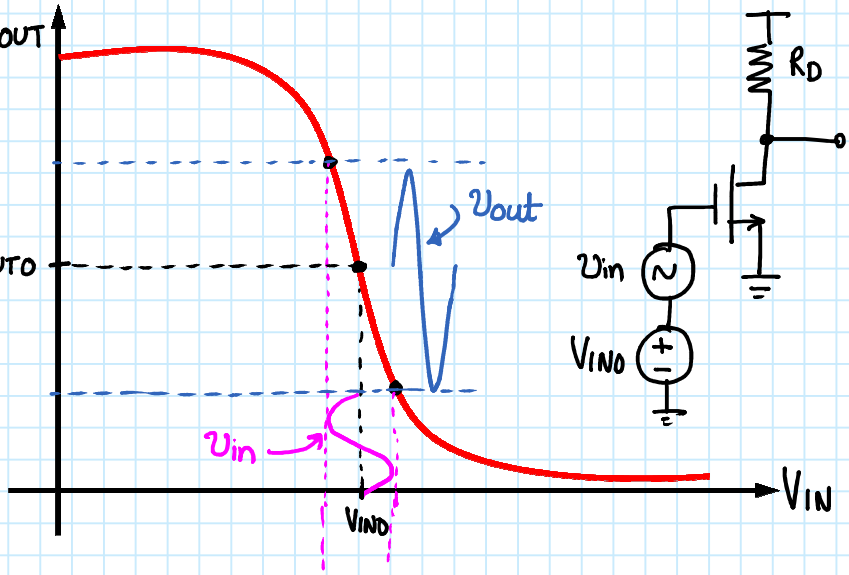

Notation:

$V_{IN} = V_{IN} + v_{in}$

DC — incremental quantity