Lecture 9 [DC operating point calculation, PMOS]

Example #2:

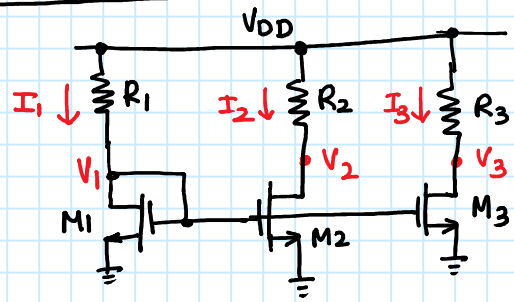

Given: $V_{DD} = 5V$

$\mu_n C_{ox} = 100\mu A/V^2$, $V_T =$

$\left(\frac{W}{L}\right)_1 = \frac{125}{1}$; $\left(\frac{W}{L}\right)_2 = 2\left(\frac{W}{L}\right)_1$; $\left(\frac{W}{L}\right)_3 = 3\left(\frac{W}{L}\right)_1$

Determine: (i) Region of operation of M1

(ii) V_1 & R_1 if $I_1 = 250\mu A$

(iii) R_2 such that M_2 is at the edge of saturation

(iv) I_{D3} if $V_3 = V_1$

Solution: (i) For saturation : $V_{DS} > V_{GS} - V_T \Rightarrow V_{GD} < V_T$

for M1: $V_{GD} = 0 < V_T = 1V \Rightarrow$ saturation

M1 is a "diode connected" device

(ii) $I_1 = 250\mu A = \frac{100\mu}{2} \times \frac{125}{1} \times (V_1 - 1)^2 \Rightarrow V_1 = 1.2V$

$$R_1 = \frac{V_{DD} - V_1}{I_1} = \frac{5 - 1.2}{250\mu} = 15.2k\Omega$$

(iii) $V_{GS2} = V_{GS1} = 1.2V \Rightarrow V_{DS2} = V_2 \geq V_{GS2} - V_T = 0.2V$

M_2 is in saturation

$$\Rightarrow I_2 = \frac{100\mu}{2} \times \left(\frac{W}{L}\right)_2 \times 0.2^2 = 2 \times \frac{100\mu}{2} \times \left(\frac{W}{L}\right)_1 \times 0.2^2$$

$$= 2I_1 = 500\mu A$$

$$\Rightarrow R_2 = \frac{V_{DD} - V_2}{I_2} = \frac{5 - 1.2}{500\mu} = 7.6k\Omega$$

(iv) if $V_3 = V_1$ then M_3 operates in saturation (why?)

$$I_3 = 3I_1 = 750\mu A$$

Observations:

If a MOS transistor is operating in saturation:

$$I_{DS} = \frac{\mu_n C_{ox}}{2} \cdot \frac{W}{L} \cdot V_{OV}^2 \quad \text{where } V_{OV} = V_{GS} - V_T$$

$$\Rightarrow I_{DS} \propto \frac{W}{L} \cdot V_{OV}^2$$

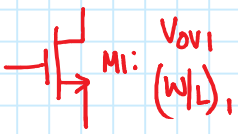

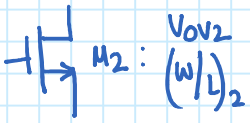

Given M1 & M2 operate in saturation region.

Case #1 if $V_{OV1} = V_{OV2}$ then

$$I_{D2} = \frac{\mu_n C_{ox}}{2} \cdot \left(\frac{W}{L}\right)_2 \cdot V_{OV2}^2$$

$$= \frac{\mu_n C_{ox}}{2} \cdot (W/L)_1 \, V_{OV1}^2 \, \frac{(W/L)_2}{(W/L)_1}$$

$$= I_{D1} \cdot \frac{(W/L)_2}{(W/L)_1}$$

Case #2: if $(W/L)_1 = (W/L)_2$ then

$$I_{D2} = \frac{V_{OV2}^2}{V_{OV1}^2} \cdot I_{D1}$$

Case #3: In general:

$$I_{D2} = \frac{(W/L)_2}{(W/L)_1} \cdot \frac{V_{OV2}^2}{V_{OV1}^2} \cdot I_{D1}$$

$\Rightarrow$ In the previous example M1, M2 & M3 operate in saturation and have same overdrive voltage

$$\Rightarrow \quad I_2 = \frac{250/1}{125/1} \times 250\mu A = 500\mu A$$

$$\& \quad I_3 = \frac{375/1}{125/1} \times 250\mu A = 725\mu A.$$

P-channel MOSFET (PMOS):

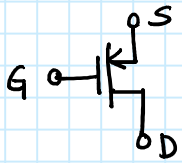

- Source is at higher potential than Drain
- Threshold voltage $V_{TP} < 0$

  $V_{TP} = -1V$ for ECE 342

Regions of operation:

Cut off : $V_{GS} > V_{TP}$ $\quad I_{DS} = 0$

Triode : $V_{GS} < V_{TP}$ & $V_{DS} > V_{GS} - V_{TP}$

$$I_{DS} = -\mu_p C_{ox} \frac{W}{L} \left[(V_{GS} - V_T) V_{DS} - \frac{V_{DS}^2}{2} \right]$$

Saturation : $V_{GS} < V_{TP}$ & $V_{DS} < V_{GS} - V_{TP}$

$$I_{DS} = -\mu_p C_{ox} \frac{W}{L} \left(V_{GS} - V_{TP} \right)^2$$

Note: Negative quantities (V_{GS}, V_{DS}, ...) may make algebra/calculations somewhat confusing. So just think in positive quantities (as in the case of NMOS) as shown below.

Cut off : $V_{SG} < |V_{TP}|$

Triode : $V_{SG} > |V_{TP}|$ or $|V_{GS}| > |V_{TP}|$

$V_{SD} < V_{SG} - |V_{TP}|$

$$I_{DS} = \frac{\mu_p C_{ox}}{2} \left(\frac{W}{L} \right) \left[(V_{SG} - |V_{TP}|) V_{SD} - \frac{V_{SD}^2}{2} \right]$$

Saturation: $V_{SG} > |V_{TP}|$ & $V_{SD} > V_{SG} - |V_{TP}|$

$$I_{DS} = \frac{\mu_p C_{ox}}{2} \cdot \left(\frac{W}{L} \right) \left(V_{SG} - |V_{TP}| \right)^2$$

$$= \frac{\mu_p C_{ox}}{2} \cdot \left(\frac{W}{L} \right) \cdot V_{OV}^2 \; ; \; V_{OV} = V_{SG} - |V_{TP}|$$