Lecture 8

NMOS regions of operation:

Cut off : $V_{GS} < V_T$ & $I_{DS} = 0$

Triode or linear : $V_{GS} > V_T$ & $V_{DS} < V_{GS} - V_T$

$$I_{DS} = \mu_n C_{ox}\left(\frac{W}{L}\right)\left[(V_{GS} - V_T)V_{DS} - \frac{V_{DS}^2}{2}\right]$$

$$I_{DS} = f(V_{GS}, V_{DS})$$

NMOS behaves like a voltage controlled resistor

$$R_{on} \approx \frac{1}{\mu_n C_{ox}(W/L)[V_{GS} - V_T - V_{DS}]}$$

Saturation Region : $V_{GS} > V_T$ $V_{DS} > V_{GS} - V_T$

Notation : We will denote $V_{GS} - V_T$ (overdrive voltage) as V_{OV}

$$\boxed{V_{GS} - V_T = V_{OV}}$$

$$I_{DS} = \frac{\mu_n C_{ox}}{2} \cdot \left(\frac{W}{L}\right) \cdot (V_{GS} - V_T)^2 = \frac{\mu_n C_{ox}}{2} \cdot \left(\frac{W}{L}\right) \cdot V_{OV}^2$$

$$\frac{\partial I_{DS}}{\partial V_{DS}} = 0 \Rightarrow R_{on} = r_{ds} = \infty$$

$\Rightarrow$ MOSFET behaves like an "ideal" current source when biased in saturation region of operation

$\Rightarrow$ Value of the current source is set by applied V_{GS} voltage

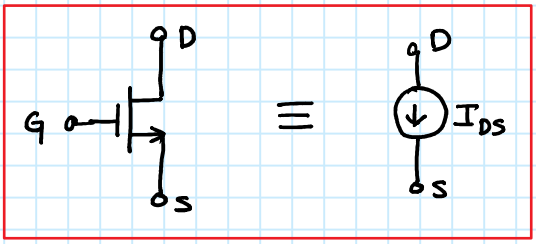

$$I_{DS} = \frac{\mu_n C_{ox}}{2} \cdot \frac{W}{L} \cdot (V_{GS} - V_T)^2$$

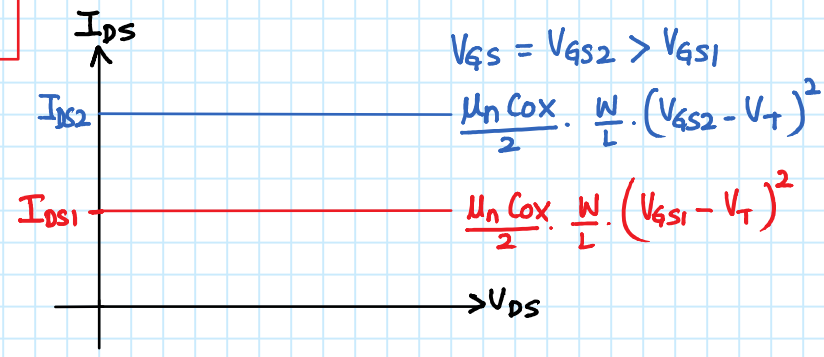

MOSFET acts as a Voltage Controlled Current Source (VCCS)

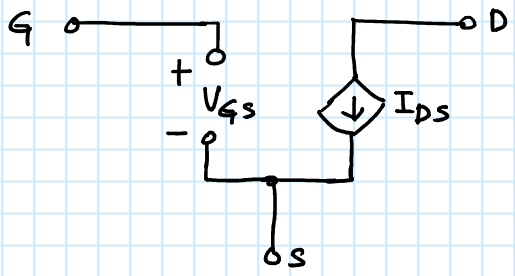

VCCS gain: $G_m = \frac{\partial I_{DS}}{\partial V_{GS}} =$ (Transconductance)

$\begin{cases} \mu_n C_{ox} \cdot \frac{W}{L} \cdot V_{DS} & \text{(Linear region)} \\ \mu_n C_{ox} \frac{W}{L} (V_{GS} - V_T) & \text{(Saturation)} \end{cases}$

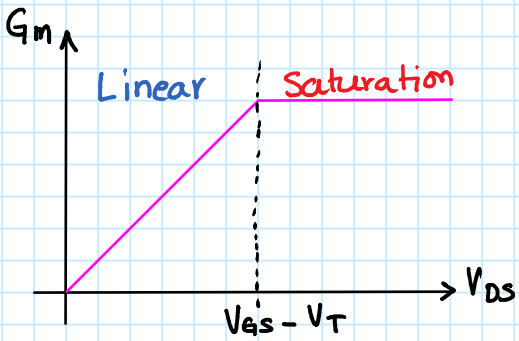

⇒ MOSFET transconductance (G_m) is maximum in saturation region of operation

⇒ Voltage amplifiers can be designed using MOSFET as VCCS (more later)

DC analysis of MOS circuits:

Example #1

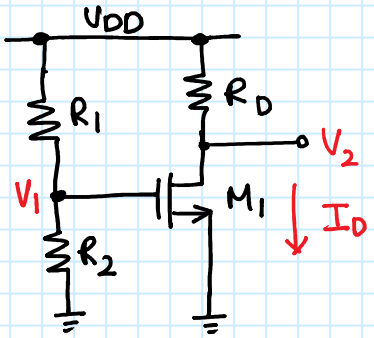

Given:

$V_{DD} = 5V$

$\mu_n C_{ox} = 100\mu A/V^2$, $V_T = 1V$

$\left(\frac{W}{L}\right)_1 = \frac{500}{1}$

$R_1 = 38k\Omega$; $R_2 = 12k\Omega$

$R_D = 4k\Omega$

Determine: (i) I_D & V_2

(ii) Range of R_D values to keep M_1 in saturation

Solution:

$V_1 = \frac{R_2}{R_1 + R_2} V_{DD} = 1.2V$

$V_2 = V_{DD} - I_D R_D = 1V$

Assume M_1 is in saturation

$\Rightarrow I_D = \frac{100\mu}{2} \times \frac{500}{1} \times 0.2^2 = 1mA$

$\Rightarrow V_{DS1} = 1V > V_{GS} - V_T = 0.2V$

$\Rightarrow M_1$ is indeed in saturation

For M_1 to be in saturation: $V_{DS} \geq V_{GS} - V_T$

$\Rightarrow V_D \geq V_G - V_T$

$V_D = 5 - 1mA \times R_D \geq 0.2$

$\Rightarrow R_D \leq 4.8\,k\Omega$

Example #2:

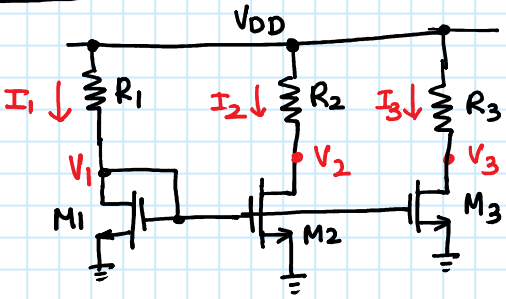

Given: $V_{DD} = 5V$

$\mu_n C_{ox} = 100\mu A/V^2$, $V_T = 1V$

$\left(\frac{W}{L}\right)_1 = \frac{125}{1}$; $\left(\frac{W}{L}\right)_2 = 2\left(\frac{W}{L}\right)_1$; $\left(\frac{W}{L}\right)_3 = 3\left(\frac{W}{L}\right)_1$

Determine: (i) Region of operation of M1

(ii) V_1 & R_1 if $I_1 = 250\mu A$

(iii) R_2 such that M_2 is at the edge of saturation

(iv) I_{D3} if $V_3 = V_1$

Solution: (i) For saturation: $V_{DS} > V_{GS} - V_T \Rightarrow V_{GD} < V_T$

for M1: $V_{GD} = 0 < V_T = 1V \Rightarrow$ saturation

M1 is a "diode connected" device

(ii) $I_1 = 250\mu A = \frac{100\mu}{2} \times \frac{125}{1} \times (V_1 - 1)^2 \Rightarrow V_1 = 1.2V$

$R_1 = \frac{V_{DD} - V_1}{I_1} = \frac{5 - 1.2}{250\mu} = 15.2\,k\Omega$

(iii) $V_{GS2} = V_{GS1} = 1.2V \Rightarrow V_{DS2} = V_2 \geq V_{GS2} - V_T = 0.2V$

M_2 is in saturation

$\Rightarrow I_2 = \frac{100\mu}{2} \times \left(\frac{W}{L}\right)_2 \times 0.2^2 = 2 \times \frac{100\mu}{2} \times \left(\frac{W}{L}\right)_1 \times 0.2^2$

$= 2I_1 = 500\mu A$

$\Rightarrow R_2 = \frac{V_{DD} - V_2}{I_2} = \frac{5 - 0.2}{500\mu} = 9.6\,k\Omega$

(iv) if $V_3 = V_1$ then M_3 operates in saturation (why?)

$I_3 = 3I_1 = 750\mu A$