Lecture 3 (Independent & dependent sources)

Independent sources:

(1) Voltage source:

Applications: Power supply, biasing, etc.

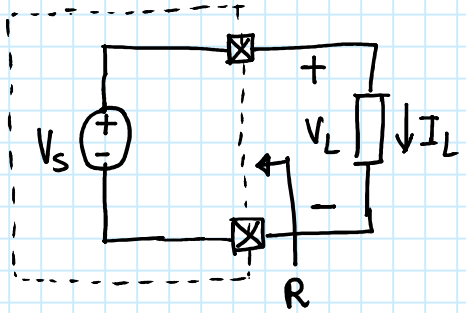

$R = 0$

$V_L = V_s$ independent of I_L

(2) Non-ideal voltage source:

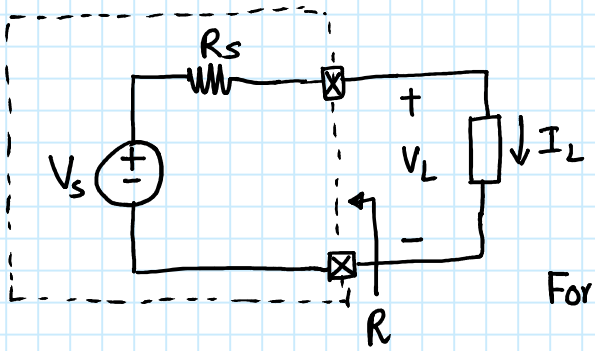

$R = R_s$

$V_L = V_s - I_L R_s$

$\Rightarrow V_L$ depends on I_L

For a good voltage source $R_s \sim 100\,m\Omega$

(3) Ideal current source:

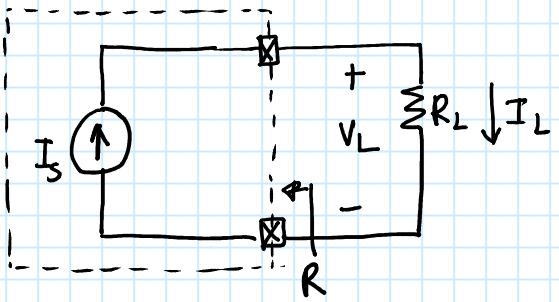

Applications: Biasing, active load, etc.

$R = \infty$

$I_L = I_s$ independent of R_L

(4) Non-ideal current source:

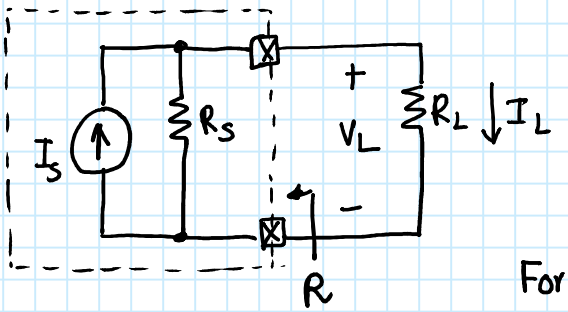

$R = R_s$

$I_L = \dfrac{R_s}{R_s + R_L} \cdot I_s$

$\Rightarrow I_L$ depends on I_s

For a good current source $R_s \sim 10\,M\Omega$

Two variables: Voltage (v) & current (c)

$\Rightarrow$ 4 combinations: VCVS, VCCS, CCVS, CCCS

Voltage Controlled Voltage Source (VCVS)

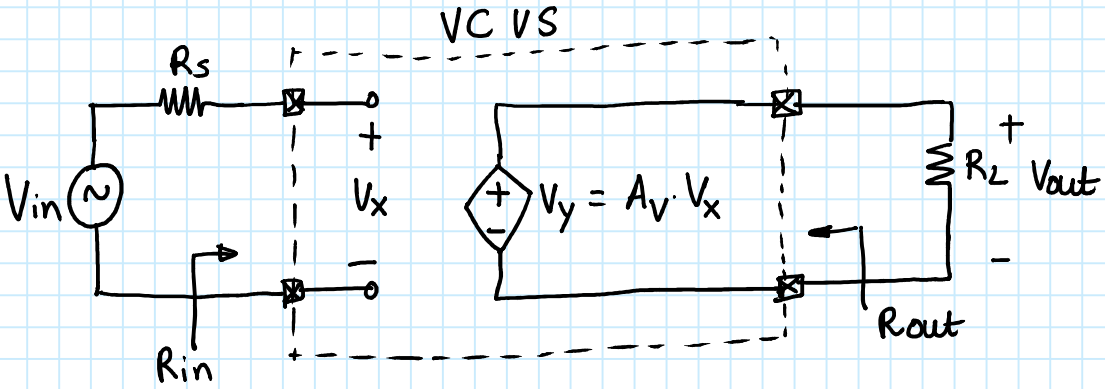

$V_x = V_{in}$ & $V_{out} = V_y = A_v \cdot V_x \Rightarrow \frac{V_{out}}{V_{in}} = A_v$

$R_{in} = \infty$ & $R_{out} = 0$

VCVS with finite input/output impedances

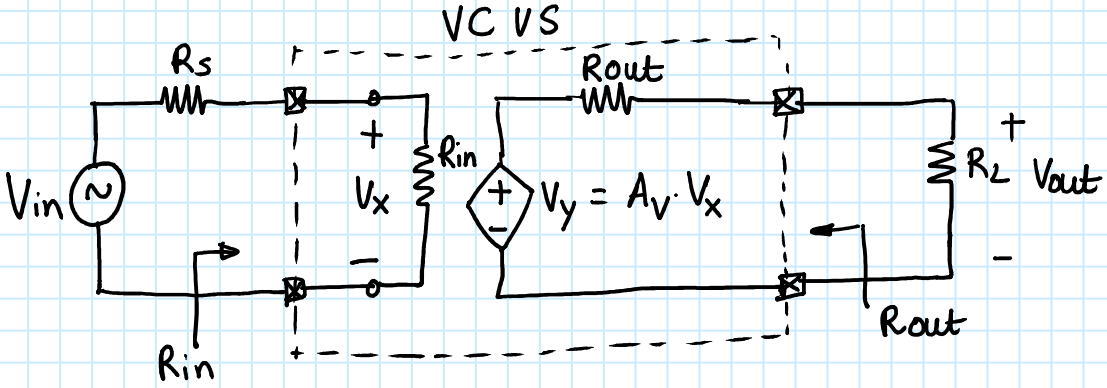

$V_x = \frac{R_{in}}{R_{in}+R_s} \cdot V_{in} = \alpha V_{in}$ where $\alpha = R_{in}/(R_{in}+R_s)$

$\Rightarrow$ R_{in} causes input signal attenuation

$V_{out} = A_v \cdot V_x \cdot \left(\frac{R_L}{R_L+R_{out}}\right) = A_v \cdot \beta \cdot V_x$; $\beta = R_L/(R_L+R_{out})$

$\Rightarrow$ R_{out} causes output signal attenuation

$V_{out} = (\alpha \cdot \beta \cdot A_v) V_{in} \Rightarrow \frac{V_{out}}{V_{in}} = \alpha \cdot \beta \cdot V_{in}$ (reduced gain)

(2) Voltage Controlled Current Source (VCCS)

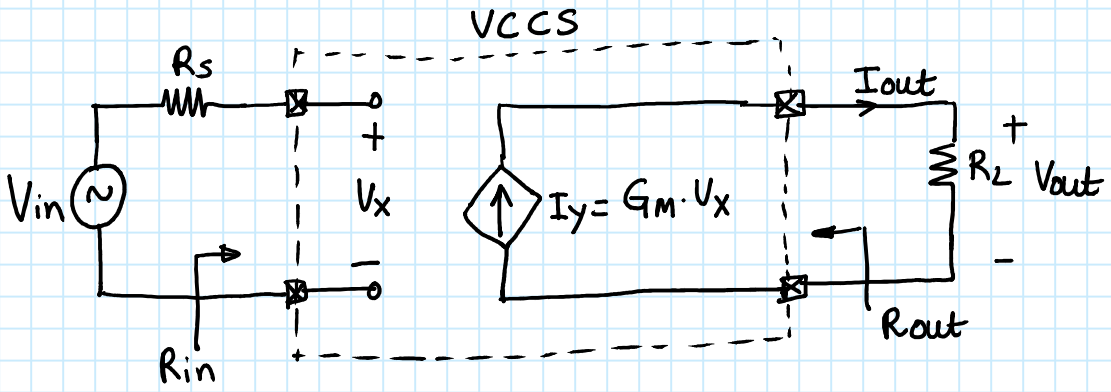

$$\text{VCCS gain} = \frac{I_y}{V_x} = G_M \equiv \text{transconductance}$$

$$R_{in} = \infty \quad \& \quad R_{out} = \infty$$

$$V_{out} = I_{out} \cdot R_L = (G_M \cdot V_x) \cdot R_L = (G_M \cdot V_{in}) \cdot R_L$$

$$\Rightarrow \frac{V_{out}}{V_{in}} = G_M \cdot R_L \equiv \text{Voltage amplifier}$$

To increase voltage gain: $\uparrow G_M$ or $\uparrow R_L$ or $\uparrow G_M$ & $\uparrow R_L$

Note: A MOSFET acts as a VCCS.

VCCS with finite input/output impedances

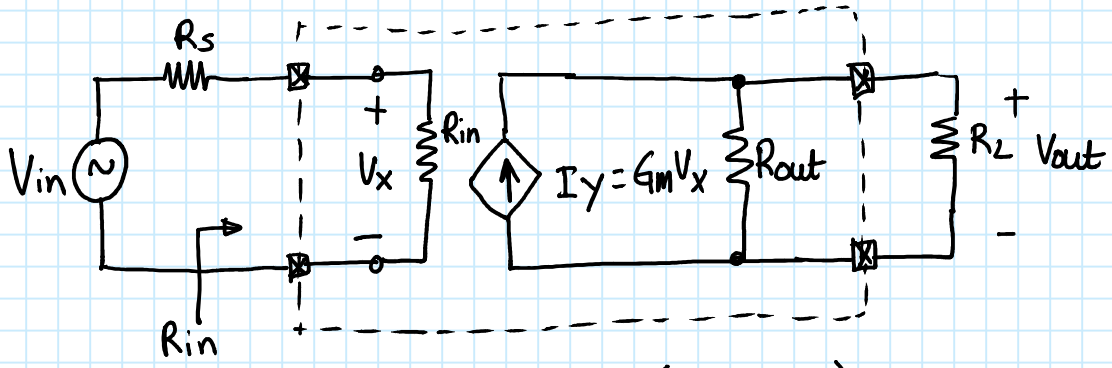

$$V_{out} = G_M \cdot V_x \cdot (R_{out} \parallel R_L)$$

$$= \left(\frac{R_{in}}{R_{in} + R_s}\right) V_{in} \cdot G_M \cdot (R_{out} \parallel R_L)$$

R_{in} reduces "effective" input signal

R_{out} reduces "effective" output current

(3) Current Controlled Voltage Source (CCVS)

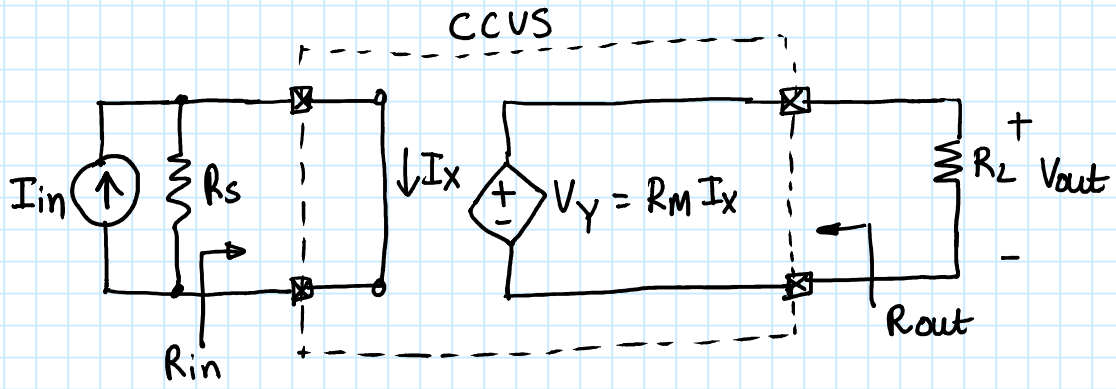

$$\text{CCVS gain} = \frac{V_y}{I_x} = R_M \equiv \text{transresistance}$$

$$R_{in} = 0 \quad \& \quad R_{out} = 0$$

CCVS with finite input/output impedances

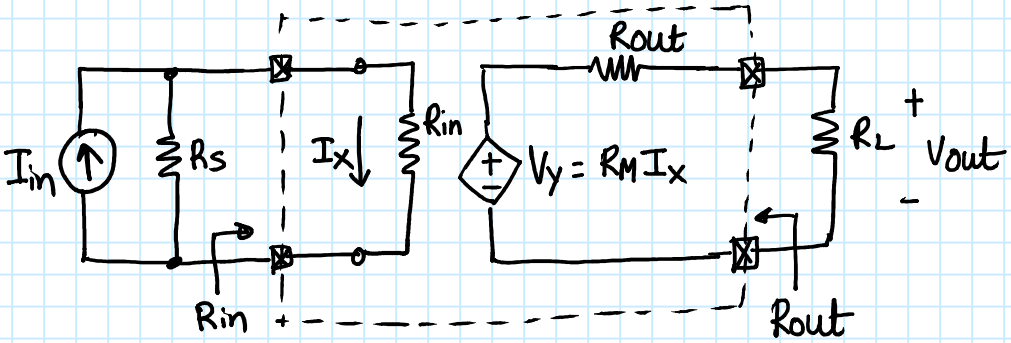

$$V_{out} = V_y \cdot \frac{R_L}{R_L + R_{out}}$$

$$= R_M \cdot \left(\frac{R_S}{R_S + R_{in}}\right) \cdot I_{in} \cdot \frac{R_L}{R_L + R_{out}}$$

$$\frac{V_{out}}{I_{in}} = \left(\frac{R_S}{R_S + R_{in}}\right) \cdot R_M \cdot \left(\frac{R_L}{R_L + R_{out}}\right)$$

(4) Current Controlled Current Source (CCCS)

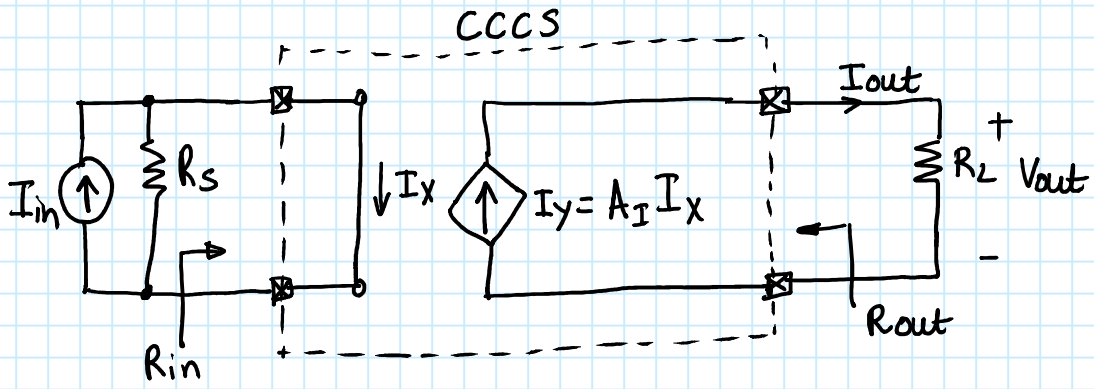

$$\text{Current gain} = \frac{I_y}{I_x} = A_I$$

$$R_{in} = 0 \quad \& \quad R_{out} = \infty$$

$$V_{out} = I_{out} \cdot R_L = (A_I \cdot I_x) \cdot R_L = (A_I \cdot I_{in}) \cdot R_L$$

$$\Rightarrow \frac{V_{out}}{I_{in}} = A_I \cdot R_L$$

Note: A BJT acts as a CCCS

CCCS with finite input/output impedances

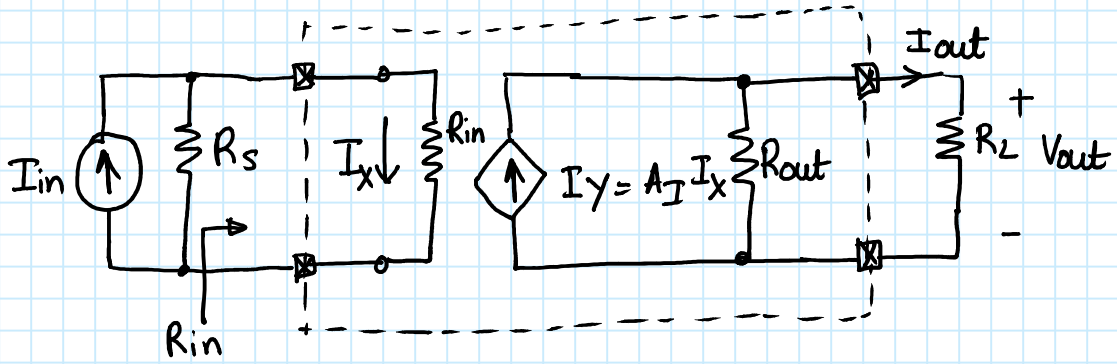

$$V_{out} = I_{out} \cdot R_L = I_y \,(R_{out} \parallel R_L)$$

$$= \left(\frac{R_s}{R_s + R_{in}}\right) I_{in} \cdot A_I \cdot (R_{out} \parallel R_L)$$

R_{in} reduces "effective" input signal

R_{out} reduces "effective" output current

Examples: Calculate $\frac{V_{out}}{V_{in}}$ for the circuits shown below

a

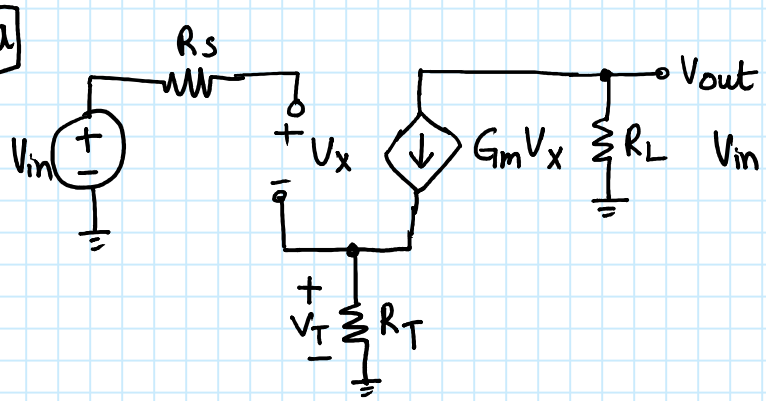

$V_{out} = -G_m \cdot V_x R_L$

$V_{in} = V_x + \underbrace{G_M \cdot V_x \cdot R_T}_{V_T} \Rightarrow V_x = \frac{V_{in}}{1+G_m R_T}$

$$\Rightarrow \boxed{\frac{V_{out}}{V_{in}} = \frac{-G_m}{1+G_m R_T} \cdot R_L}$$

b

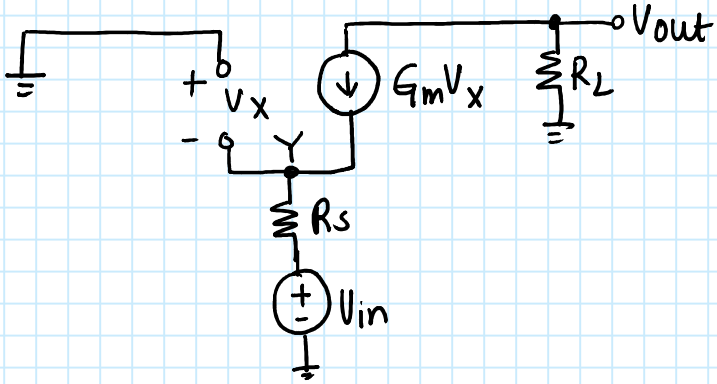

$V_x = -V_y = \frac{-V_{in}}{1+G_m R_s}$

$$\boxed{\frac{V_{out}}{V_{in}} = \frac{G_m}{1+G_m R_s} \cdot R_L}$$

c

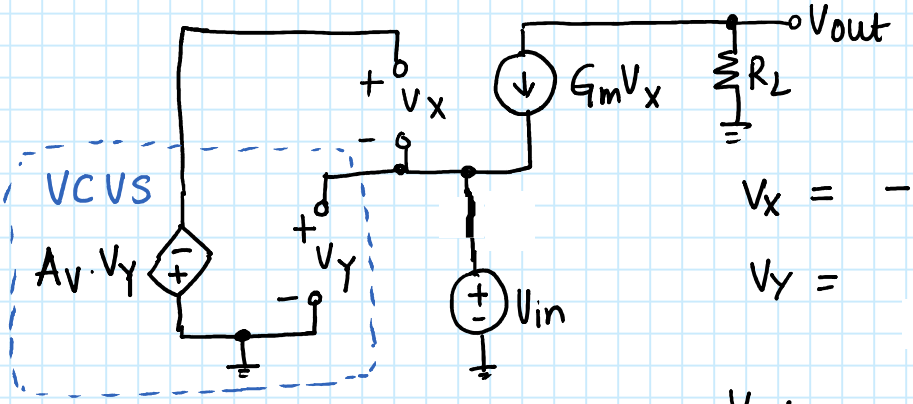

$V_x = -A_V \cdot V_y - V_y = -(A_V+1) \cdot V_y$

$V_y = V_{in}$

$V_{out} = -G_m \cdot -(A_V+1) \cdot V_{in} \cdot R_L$

$$\boxed{\frac{V_{out}}{V_{in}} = G_m \cdot R_L \cdot (A_V+1)}$$