Welcome to ECE342

Course Logistics (I)

- Course webpage: https://courses.grainger.illinois.edu/ece342/fa2020/index.html
- Instructors:

Pavan Hanumolu

Office Hours: Mon. 10:00 AM – 10:50 AM

Location : On zoom

Email: hanumolu@illinois.edu

Chandra Radhakrishnan

Office Hours: Tue. 5:00 PM – 6:00 PM

Location: On zoom

Email: cradhak@illinois.edu

Course Logistics (II)

- Teaching assistants

Tianyu Wang
Email: wang439@illinois.edu

Ahmed Abdelrahman
Email: aea3 @illinois.edu

Kyu Sang Park
Email: kyusang2@illinois.edu

Nilanjan Pal
Email: pal6 @illinois.edu

- TA office hours
  - Wed. 6:00 PM – 7:00 PM
  - Thurs. 6:00 PM – 8:00 PM

Prerequisites

- ECE210 is mandatory
- Circuit analysis (KCL, KVL, diff. equations)
- LTI systems, impulse/frequency response
- Laplace transforms

Course Topics

- Incremental models for non-linear networks
- DC characteristics of MOS/BJT amplifiers
- Frequency response of MOS/BJT amplifiers
- Digital logic design
- Other topics: feedback, differential amplifiers

Textbook and Course Notes

- Course notes
  - Please take notes in class
  - Handwritten notes are posted on the website
- Optional: Sedra and Smith, *Microelectronic Circuits*, Oxford University Press, 7th Edition
- Video lectures
  - Lecture recordings will be posted
  - Attending live lectures is highly encouraged
- Paperless
  - Everything will be posted on class webpage

Homework Assignments

- Weekly Homework Assignments (10%)
  - *Homework must be uploaded to Gradescope no later than 5 PM on the due date*
  - *Homework is to be student's own work, not a collaborative effort; however, students are encouraged to discuss course material among themselves*

- Will post solutions right after the due date
  - So no late submissions will be accepted

- Lowest grade will be dropped

Exams

- Three Midterms and one Final

- Midterm 1 (20%)
  - Date : 09/21, 8:00 PM – 9:50 PM
  - **Conflict** : 09/22, 8:00 AM – 9:50 AM

- Midterm 2 (20%)
  - Date : 10/19, 8:00 PM – 9:50 PM
  - **Conflict** : 10/20, 8:00 AM – 9:50 AM

- Midterm 3 (20%)
  - Date : 11/16, 8:00 PM – 9:50 PM
  - **Conflict** : 11/17, 8:00 AM – 9:50 AM

- Final (30%)

- Exams will be proctored using CBTF.
- You must obtain permission for taking the conflict exam *from the course instructors prior* to scheduling with CBTF.

Honor Code

- Will trust you not to cheat
- You are bound by UI standards of academic integrity
  - http://www.admin.illinois.edu/policy/code/article1-part41-401.htm
  - http://studentcode.illinois.edu/article1_part4_1-402.html
- Serious consequences for cheating
  - Don't cheat and save me the hassle of a hearing

Circuits are Pervasive











Role of Analog Circuits

- Sensor/transducer interfaces
- Amplification
- Filtering
- Analog to digital conversion
- Digital to analog conversion
- Power management
- Clock generation
- Wireline and wireless transceivers

- Communication & Control (Internet of Things)

iphone Under the Hood

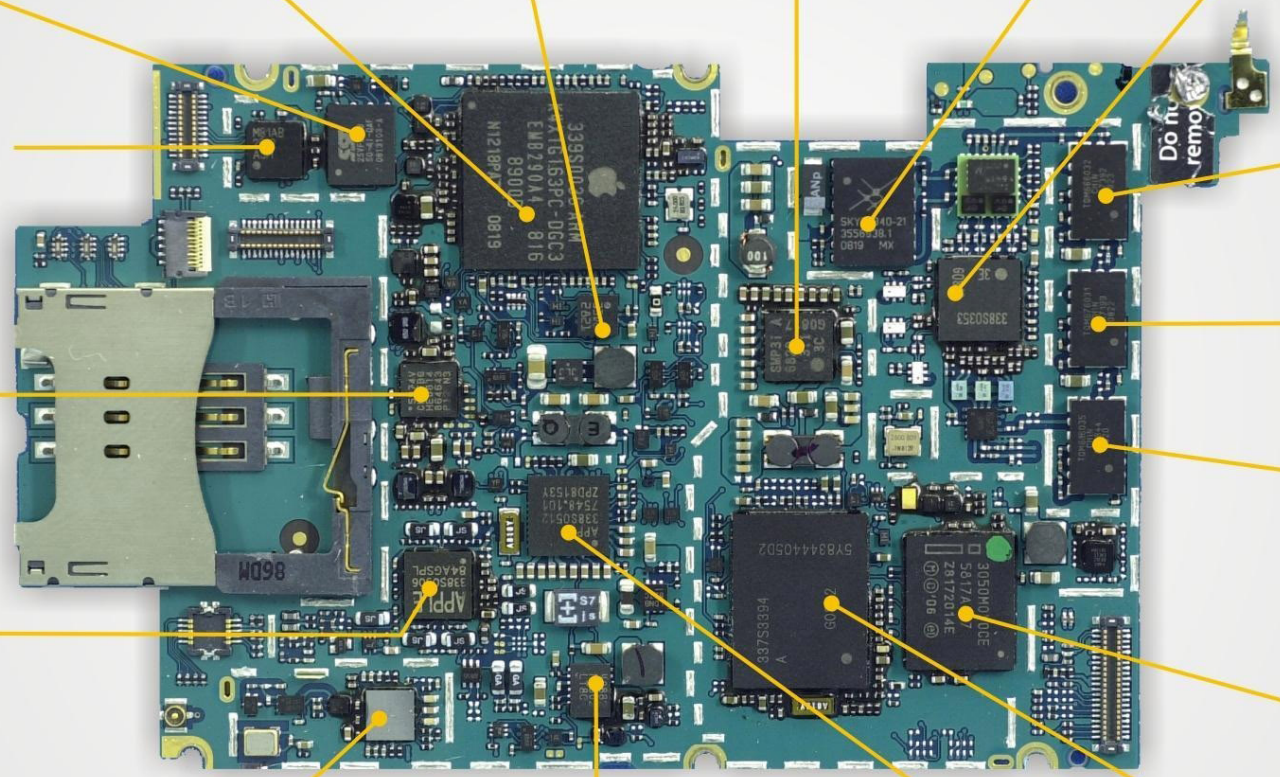

SST
SST25VF080B
1 MB Serial Flash

SAMSUNG
Application Processor and DDR SDRAM

ST MICROELECTRONICS
LIS331 DL
Accelerometer

INFINEON
SMP3i
SMARTi Power Management IC

SKYWORKS
SKY77340
Power Amp. Module

INFINEON
UMTS Transceiver

NATIONAL SEMICONDUCTOR
LM2512AA
Display Interface

TRIQUINT
TQM666032
WCDMA/HSUPA
Power Amp.

TRIQUINT
TQM676031
WCDMA/HSUPA
Power Amp.

BROADCOM
BCM5974
Touchscreen Controller

TRIQUINT
TQM616035
WCDMA/HSUPA
Power Amp.

NUMONYX
PF38F3050M0Y0CE
16 MB NOR + 8 MB Pseudo - SRAM

WOLFSON
WM6180C
Audio Codec

INFINEON
PMB2525
Hammerhead II GPS

LINEAR TECHNOLOGY
LTC4088-2
Battery Charger/ USB Controller

NXP
Power Management

INFINEON
Digital Baseband Processor

Semiconductor insights inc.

Integrated Circuit Example: Image Sensor

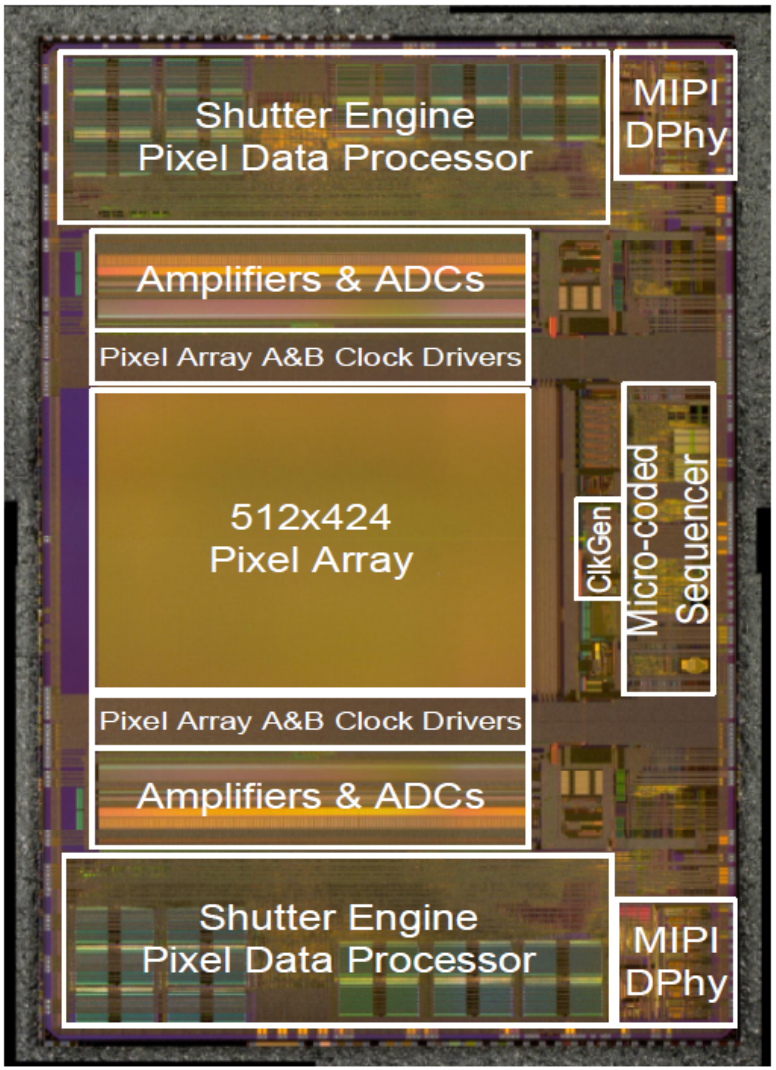

[Payne, ISSCC'14]

Discrete Vs. Integrated Circuits

Discrete circuits	Integrated circuits
▪ Limited number of available devices ▪ Precise "absolute" component values ▪ Poor "relative" matching ▪ Large R, C, L, available ▪ Breadboard verification possible ▪ Relatively cheap and quick to prototype	▪ Precise control over device geometry ▪ Large variation in component values ▪ Excellent "relative" matching ▪ Large R, C, L, are expensive ▪ Cannot breadboard. Rely on simulation. ▪ Prototyping is expensive & time consuming

Course Goals & Objectives

Learn to analyze MOS/BJT amplifiers and digital logic

- Understanding of MOS/BJT transistor behavior
  - Non-linear behavior, linearization techniques
  - Focus on behavior relevant to analog circuit design
- Analysis of DC behavior of MOS/BJT amplifiers
  - Gain calculations, I/O impedances
  - Focus on **developing intuition**
- Frequency response of MOS/BJT amplifiers
  - Pole-zero calculations, bandwidth estimation, bode plots
- Digital logic design
  - CMOS gates, sizing, delay calculations

Analysis Vs. Design

Analysis: Given a circuit, determine its behavior

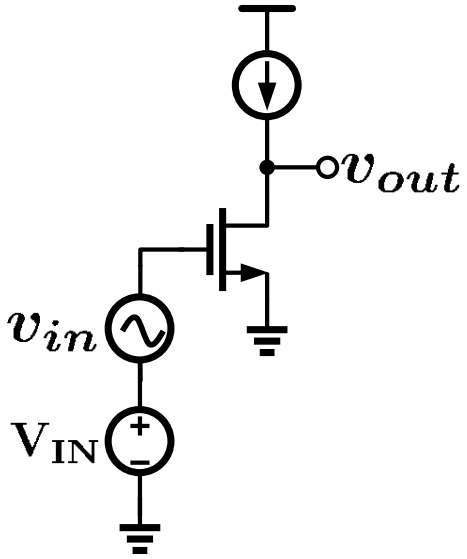

Given v_{in} V_{IN}, find v_{out}

Analysis Vs. Design

Analysis: Given a circuit, determine its behavior

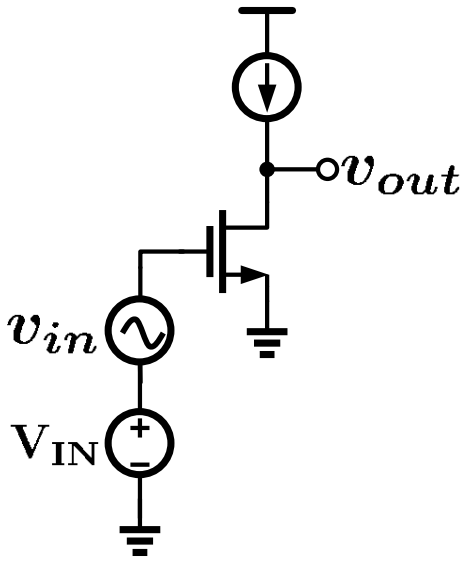

Given v_{in} V_{IN}, find v_{out}

Design: Given a task/specification, come up with a most efficient circuit that performs it

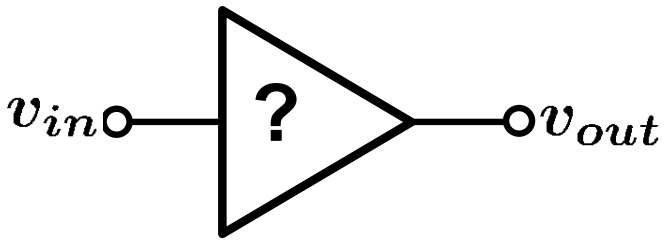

ECE342 focus: Mostly analysis but develop design intuition

Bottom line

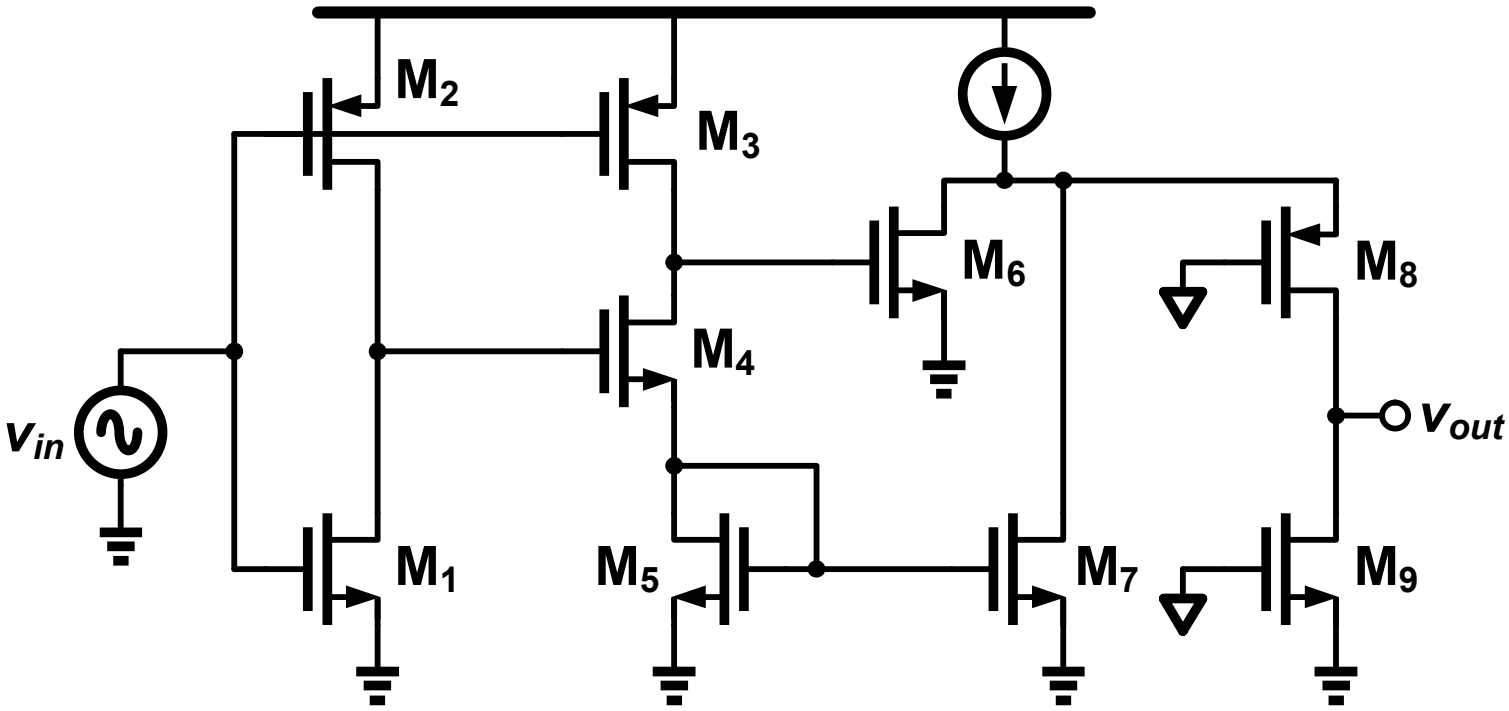

- Gain = ?
- Bandwidth = ?