1. Using incremental model, derive the expression for equivalent impedance of the configurations shown below. You may assume all transistors are biased in saturation region and $r_{ds} \neq \infty$.

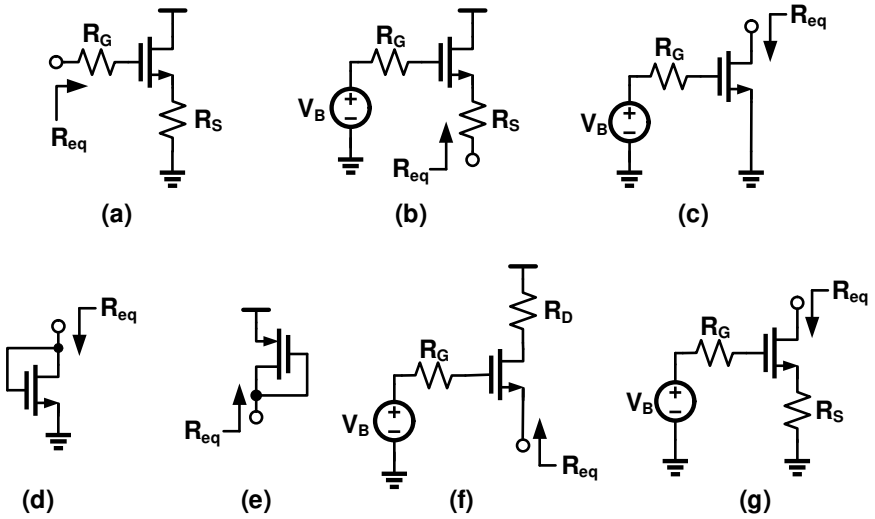

2. Determine equivalent impedance (R_{eq}) for the configurations shown below. You may assume all transistors are biased in saturation region and $r_{ds} \neq \infty$.

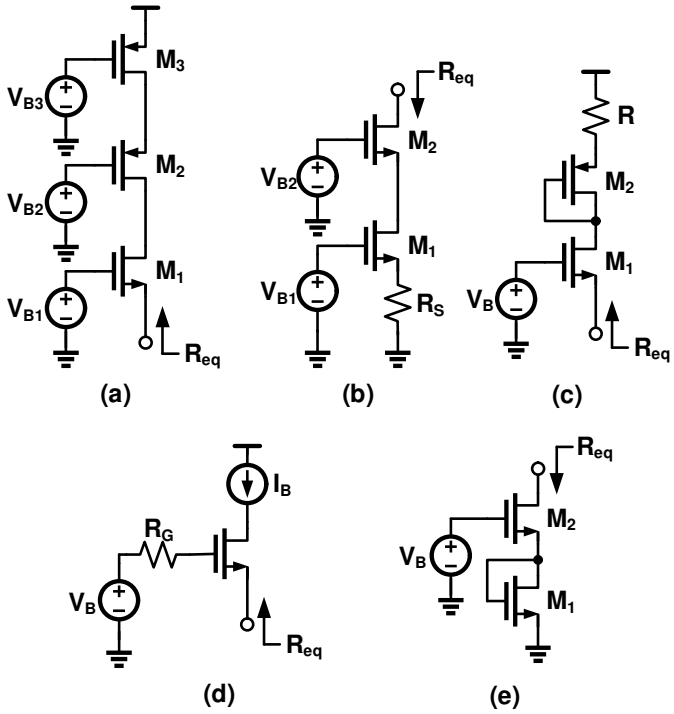

3. Determine the incremental gain ($A_V = \dfrac{v_{out}}{v_{in}}$) for the amplifier configurations shown below. Ignore body effect and assume all transistors are biased in saturation region and $r_{ds} \neq \infty$.

