ECE342 Midterm - II Fall 2020

Test Date: 10/19/2020

Total Problems: 3

Total Pages: 5

Last Name: _____

First Name: _____

Student ID (last four digits): _____

Section (D: 11am, F: 1pm): _____

1. **(25 points)** _____
2. **(40 points)** _____
3. **(35 points)** _____

Total (100 points) _____

Transistor parameters

NMOS: $\mu_n C_{ox} = 100\mu A/V^2$; $V_{TN} = 1V$;

PMOS: $\mu_p C_{ox} = 50\mu A/V^2$; $|V_{TP}| = 1V$;

Good Luck!

PROBLEM 1. (25 points) Determine numerical value of input-to-output incremental voltage gain, $A_V = \frac{v_{out}}{v_{in}}$, for the circuit shown below. W/L of M_1 is equal to $\frac{W}{L} = \frac{500}{1}$, all the PMOS transistors have dimensions of $\frac{W}{L} = \frac{1000}{1}$, $R_L = 1k\Omega$, and $V_B = 1.2V$. You may ignore r_{ds}.

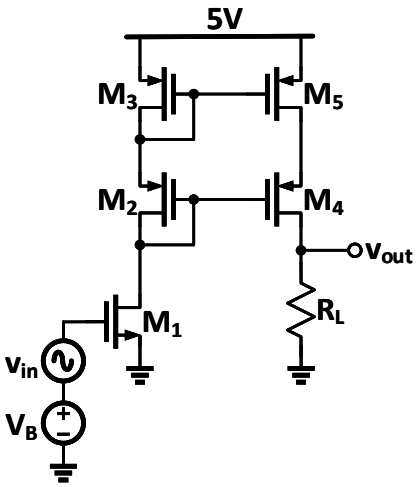

PROBLEM 2. (40 points) Determine an expression for incremental gains, $A_{v1} = \dfrac{v_{o1}}{v_{in}}$ (10 points), $A_{v2} = \dfrac{v_{o2}}{v_{in}}$ (10 points), and $A_v = \dfrac{v_{out}}{v_{in}}$ (20 points), for the circuit shown below. You may assume all transistors are biased in saturation region with $g_m r_{ds} \gg 1$. You may **NOT** assume $r_{ds} = \infty$.

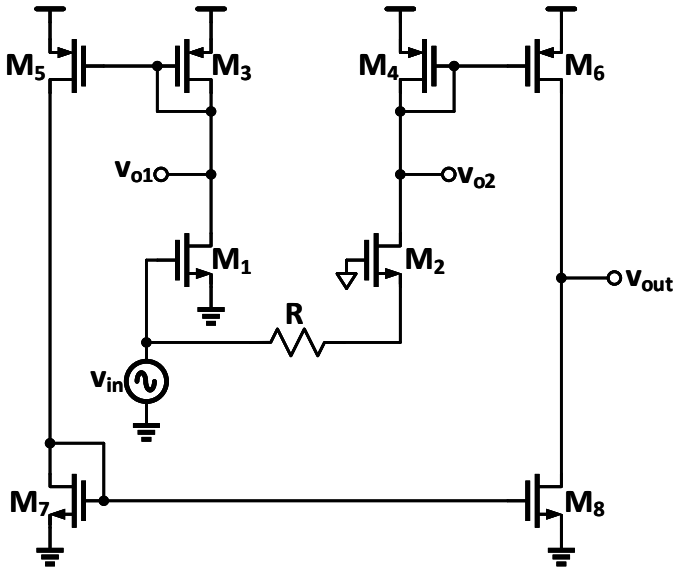

PROBLEM 3. (35 points) Determine an expression for impedances, R_{EQ1} (20 points), R_{EQ2} (15 points), for the two circuits shown below. You may assume all transistors are biased in saturation region with $g_m r_{ds} \gg 1$. You may **NOT** assume $r_{ds} = \infty$.

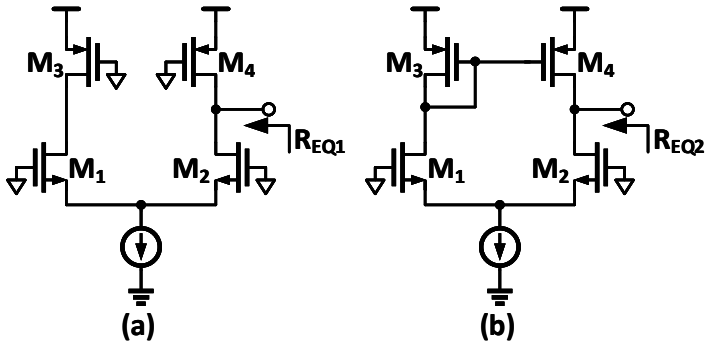

Extra page

Formula Sheet

MOSFET EQUATIONS

NMOS

Cut-off:

$$V_{GS} < V_{tn}, I_D = 0$$

Triode:

$$V_{GS} \geq V_{tn}, V_{DS} < V_{GS} - V_{tn}$$

$$I_D = \mu_n C_{ox} \left(\frac{W}{L} \right)_n \left[\left(V_{GS} - V_{tn} \right) V_{DS} - \frac{1}{2} V_{DS}^2 \right]$$

Saturation:

$$V_{GS} \geq V_{tn}, V_{DS} \geq V_{GS} - V_{tn}$$

$$I_D = \frac{\mu_n C_{ox}}{2} \left(\frac{W}{L} \right)_n \left(V_{GS} - V_{tn} \right)^2$$

PMOS

Cut-off:

$$V_{SG} < |V_{tp}|, I_D = 0$$

Triode:

$$V_{SG} \geq |V_{tp}|, V_{SD} < V_{SG} - |V_{tp}|$$

$$I_D = \mu_p C_{ox} \left(\frac{W}{L} \right)_p \left[\left(V_{SG} - |V_{tp}| \right) V_{SD} - \frac{1}{2} V_{SD}^2 \right]$$

Saturation:

$$V_{SG} \geq |V_{tp}|, V_{SD} \geq V_{SG} - |V_{tp}|$$

$$I_D = \frac{\mu_p C_{ox}}{2} \left(\frac{W}{L} \right)_p \left(V_{SG} - |V_{tp}| \right)^2$$