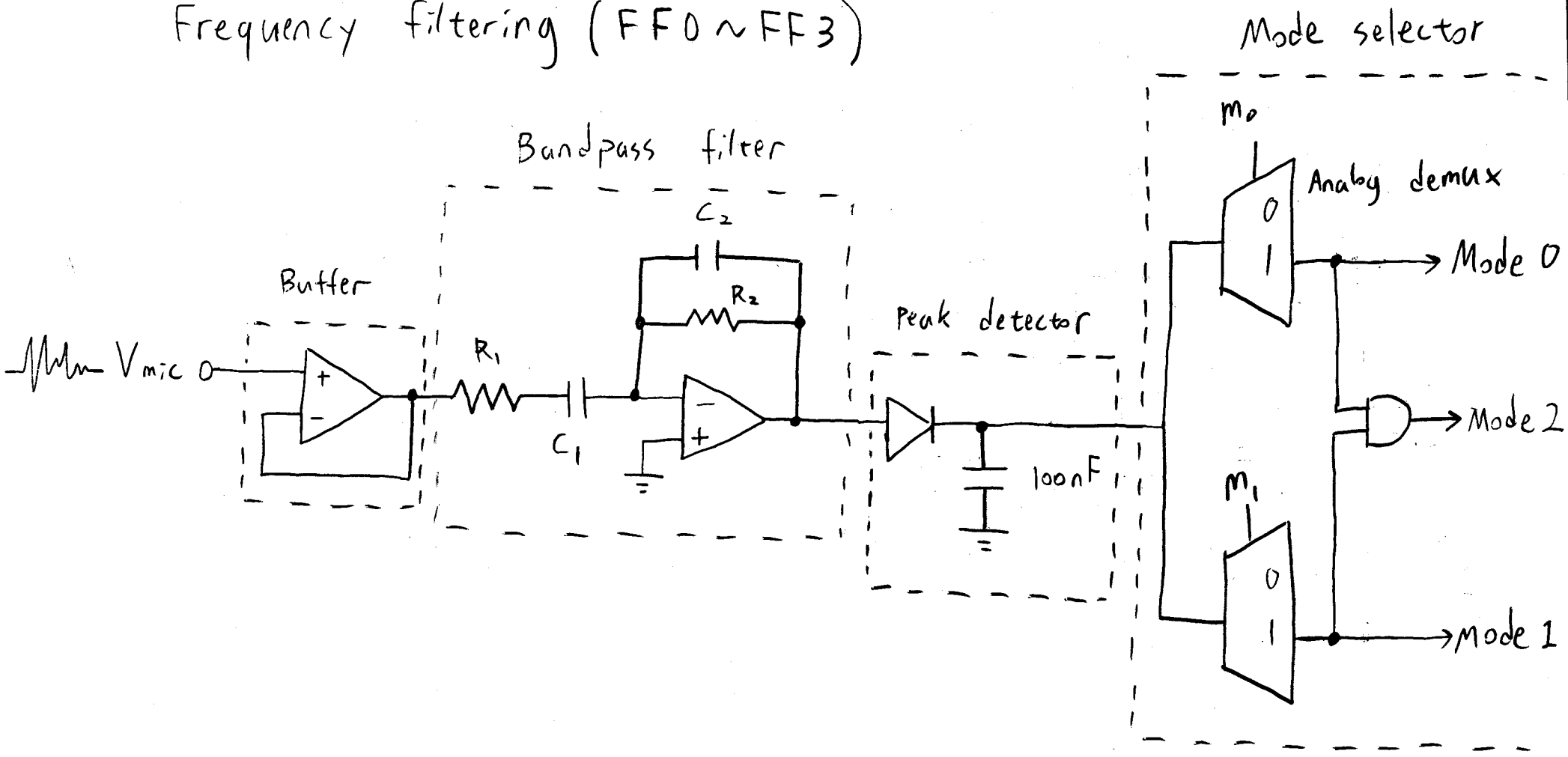Frequency filtering (FF0 ~ FF3)