Name:_____ UIN: | | | | | | | | | Section AB/BB: |

Experiment 5: Pulsed-wheel Speed Control

Laboratory Outline

This week, we continue to expand topics towards building a self-navigating car. Specifically, we will build voltage-divider circuits and "motor-drive" circuits and analyze them with the aid of a function-generator and the oscilloscope.

Learning Objectives

- Learn to allow for tuning of designs and discuss the need for conformity in testing conditions.
- Gain a deeper understanding of benchtop equipment designed for time-varying signals; the function generator and oscilloscope.

Introduction…Meet in 1005 ECEB

Drop off your Prelab in 1001 ECEB at a center table. One TA will check that you have completed your prelab assignment while the other will answer any questions you may have about last week's lab or today's prelab in 1005 ECEB. You will also receive a quick rundown of what is planned for today.

In the previous lab, we used the function generator to produce a square wave signal that modulated the voltage across a voltage divider and, in turn, caused the wheel speed to slow. Today, we will replace the function generator with our own square-wave oscillator and therefore increase the mobility of our vehicle again. The square wave we generated in the prelab oscillated at a very slow rate. Today, we will find that sometimes, obtaining the output using an LED and visually counting cycles is just not enough…

Notes:

In the Lab…Move into 1001 ECEB

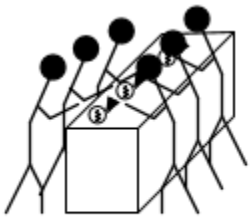

Collaborate.
Many circuits.

When instructed, move into the breakout session of the lab. Today, you will synchronize your LED flashers.

Breakout Session

After dropping your materials at your workstation, meet quickly the benches in the middle of the room. All students should supply battery power to their oscillators with the blue blinking lights. Despite the fact that each of you followed the same design procedure, you will find that there are distinct variations in the frequency of oscillation. If you think about clocks (a form of oscillator) running independently in two different geographic locations, you will probably expect them to be somewhat "out of sync".

Question 1: Go around the table and discuss what each of you found regarding the definitions of synchronous and asynchronous (alt. coherent and non-coherent). In the space below, try to explain *why* your devices are non-coherent.

On the LED circuit, **swap** your $1\ M\Omega$ resistors with $10\ k\Omega$ resistors and your $1\ \mu F$ capacitors with $0.1\ \mu F$ capacitors (yellow, they will have **104** printed on the side meaning $10 \times 10^4\ pF = 0.1\ \mu F$) as shown in Figure 1(b).

Notes:

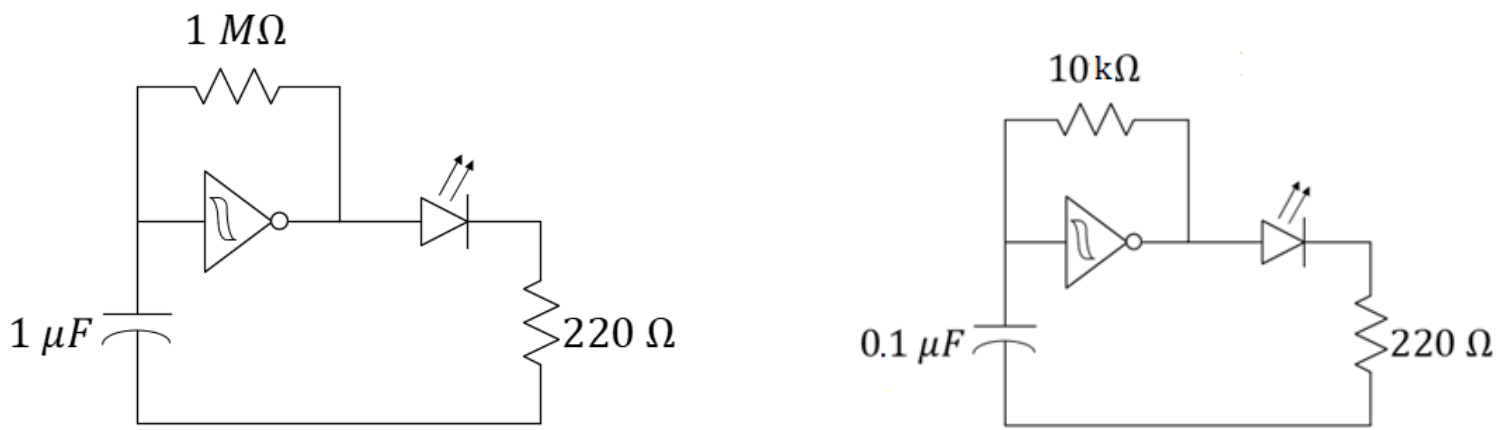

(a) (b)

***Figure 1**: (a) Pre-lab circuit. (b) An oscillator with a $10\ k\Omega$ resistor and $0.1\ \mu F$ capacitor. Don't forget to power your IC!*

Question 2: Does your blue LED light still blink? Discuss as a group, then write your thoughts on what affect the swap of components had on your circuit's operation.

At your Bench

As engineers-in-training, we need to recognize the value of our engineering tools. In the breakout session, we made a change to our circuit that limited our ability to assess the circuit's behavior. Now we will utilize the oscilloscope to open a window into our time-varying circuit. We should learn that the oscilloscope is as vital to the electronics engineer as the microscope is the microbiologist! It will be the go-to tool for just about every analysis you do through the remainder of the semester. If you have a question about your circuit and your TA does not see you using your oscilloscope, do not be surprised if they first ask you to use this tool to try to solve your own puzzle before they provide additional aid! **In every future lab, always have your oscilloscope at the ready!**

Notes:

Oscilloscope Sleuthing

Use the oscilloscope to **view simultaneously**, the voltage between **the output of each inverter** and the negative side of the battery. To do so, follow these steps:

Reset the scope to the **default** setting. With two coax-to-banana cables, use your alligator clips to connect channel 1 to the blue LED circuit of one lab partner and channel 2 to the blue LED circuit of the *other* lab partner. The black probe of each scope should be connected to the negative terminal of each battery. (These negative terminals are now actually connected to each other by the scope itself!)

Adjust the horizontal and vertical scales until the signal on Channel 1 is clearly displayed. Increase the trigger level to about 3 volts so that the Channel 1 signal remains steady.

Press the "2" until it remains illuminated to display channel 2 as well. Both the "1" and the "2" should be illuminated.

Press the **trigger** button and make sure the scope is triggering on channel 1.

Question 3: Channel 2 will be "sweeping" past while channel 1 appears to remain stationary on the screen. Explain. Use some variation of the word "coherent" in your explanation.

Press Channel **1**, then add the following four measurements: **Frequency**, **amplitude**, **DC RMS – Full Screen**, and **+ duty cycle**. To add these measurements, follow this procedure:

Press: [1] so that Channel 1 is illuminated.

Hard key: [Meas] (a physical, labeled button on the right side of the oscilloscope)

Soft key: [Add Meas ⇩] (computer-labeled button on the left side of the oscope that changes with hard key choices)

Soft key: [Type: *XXXX*]

Selection: [Frequency], [Amplitude], [+ Duty Cycle], or [DC RMS – Full Screen] (use finger or selection knob)

Hard key: [Meas] (when you want to clear the menu from the screen)

Repeat for each selection on Channel 1, then repeat for Channel 2.

Question 4: Record all four measurements for channel 1. Repeat for channel 2. If necessary, review the course notes about significant figures with respect to reading instruments.

Comment: Small differences in values, temperatures, etc., will inevitably result in two different "clock" frequencies for two isolated circuits despite your most valiant efforts to tune.

Notes:

Bookmark:

How to add a **measurement** to the oscilloscope.

Slow the Motor

Use the function generator to slow the motor as shown in Figure 2 below. Use a square wave with **the same frequency, amplitude, and offset as your previous oscillator measurements** while driving the blue LED. The offset voltage is necessary to make your signal go from 0 volts to something near the battery voltage instead of a voltage that goes negative relative to the reference/ground node. Observe the voltage V_2 on the oscilloscope's Channel 1 (press the **2** until Channel 2 turns off). Note that you will need to make sure the battery is *only* connected between the motor and the source (S) pin of the MOSFET. It should ***not*** be connected to the positive terminal of the function generator.

Change the duty cycle of the function generator from 20 to 50 to 80%. To do so, press **Shift**, then the key that says **%DUTY**. Adjust by turning the knob.

Question 5: Discuss the effect of duty cycle on the speed of the wheel.

Notes:

Reminder:

You need to set the function generator to **High-Z mode**. Look for the bookmark on last week's lab.

Duty cycle is the percentage of time a signal is active (high) during one period of a periodic signal.

Notes:

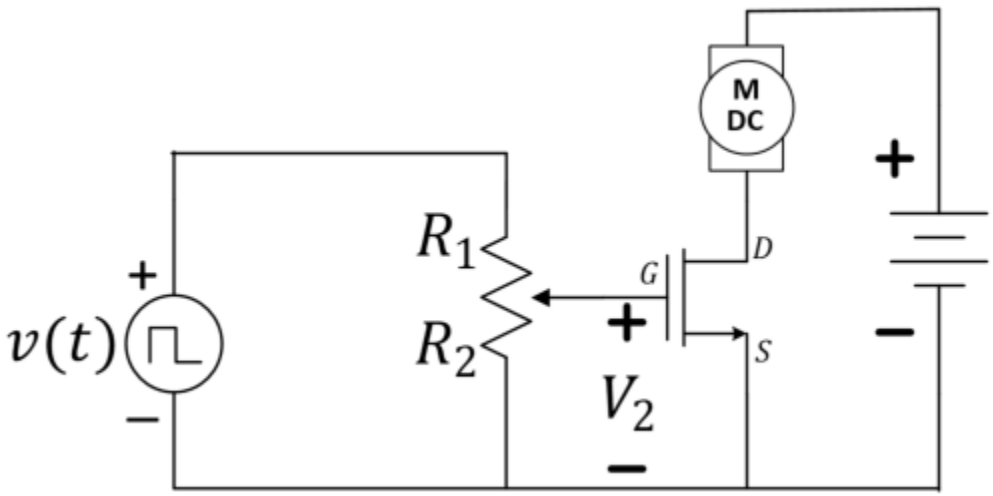

***Figure 2**: Slowing the motor speed in the motor-drive circuit.*

Remove the function generator from the circuit.

Build

Build an oscillator on the same bread board as your two motor-drive circuits. Connect the oscillator to the potentiometers as in Figure 3.

Notes:

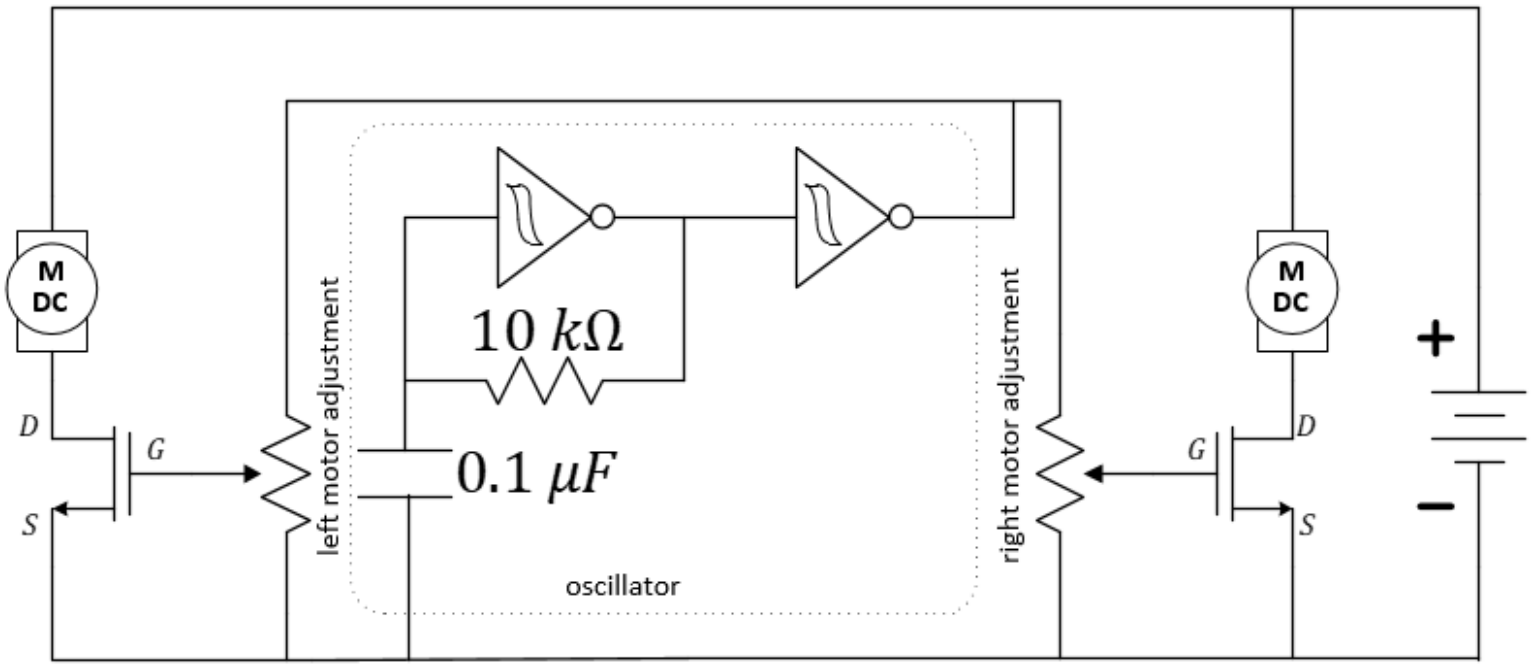

***Figure 3**: The oscillator can be used to slow both wheels while the potentiometers allow for individual wheel-speed adjustments. Note the use of an extra inverter as a **buffer**!*

Notes:

Analysis

Question 6: Use your amplitude and duty cycle measurements from Question 4 (Channel 1) to compute the RMS voltage for your oscillator. Show your work.

Question 7: Compare your result from Question 6 to the oscilloscope's measurement of RMS voltage from Question 4.

Question 8: Use the oscilloscope to directly measure the RMS voltage at each MOSFET gate. Place the black probes at the **negative** side of the battery and the red probes at the gate of each transistor in turn (Figure 4).

Notes:

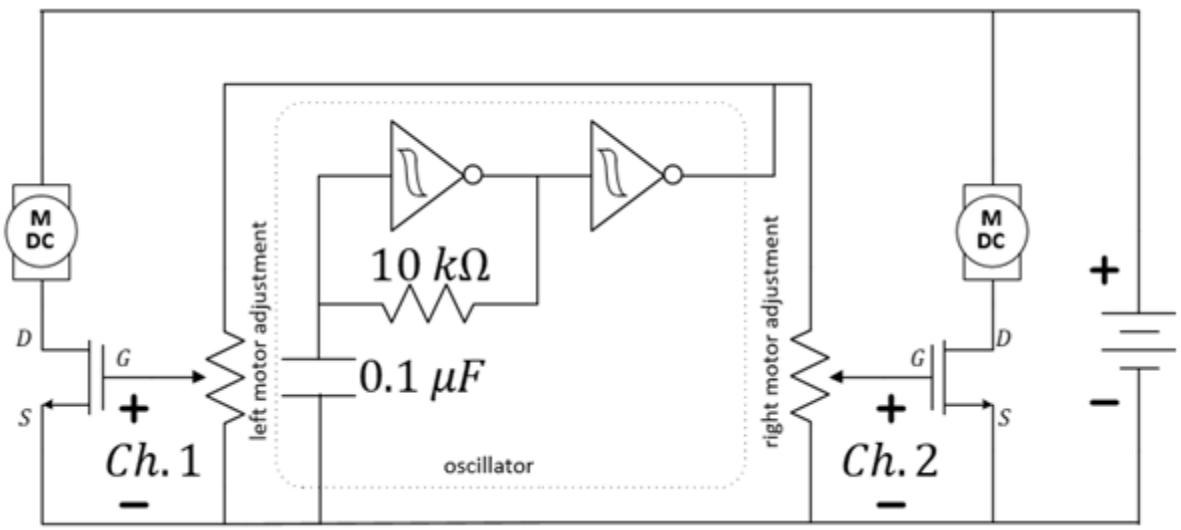

***Figure 4**: Using the oscilloscope to measure to the gates of the MOSFETs.*

Question 9: State some facts to explain the difference between the estimated and measured RMS voltage.

Use the oscilloscope to observe the voltage across the two motors. Place the black probes at the ***positive*** side of the battery and the red probes at the other end of each motor.

Notes:

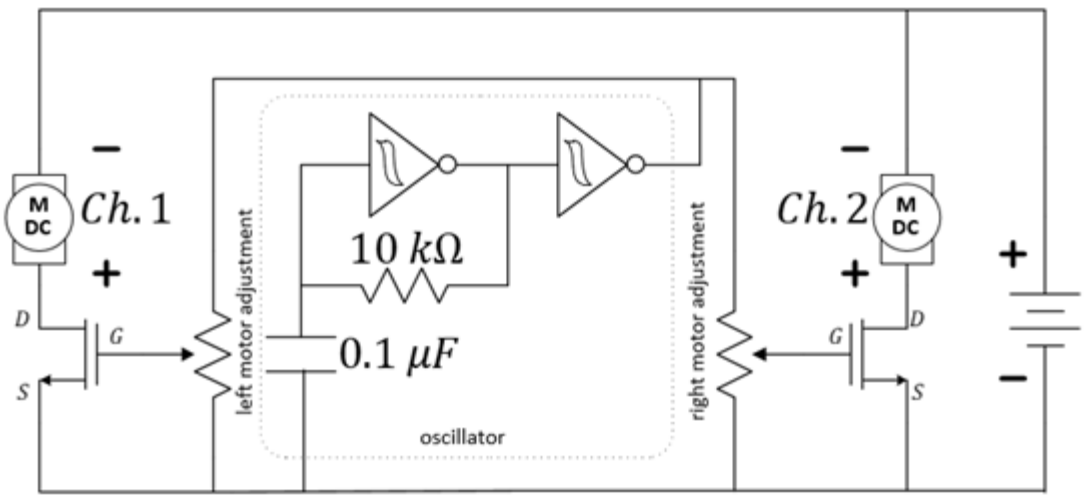

***Figure 5**: Using the oscilloscope to measure across the motors.*

Note that the voltage across the motor is not a perfect square wave. In fact, there is a significant voltage spike when the MOSFET is suddenly turned off. This is referred to as counter-electromotive force (counter-EMF) or sometimes simply "back EMF". This is a direct result of the windings of the motor acting as an inductor which stores energy in a magnetic field as current flows through it. When the current drive is suddenly suppressed, that stored field energy will resist such a sudden change causing the high spike in voltage.

Question 10: Sketch (or capture using BenchVUE and plot in MATLAB) the signal across one motor, careful to show the spike in voltage.

Notes:

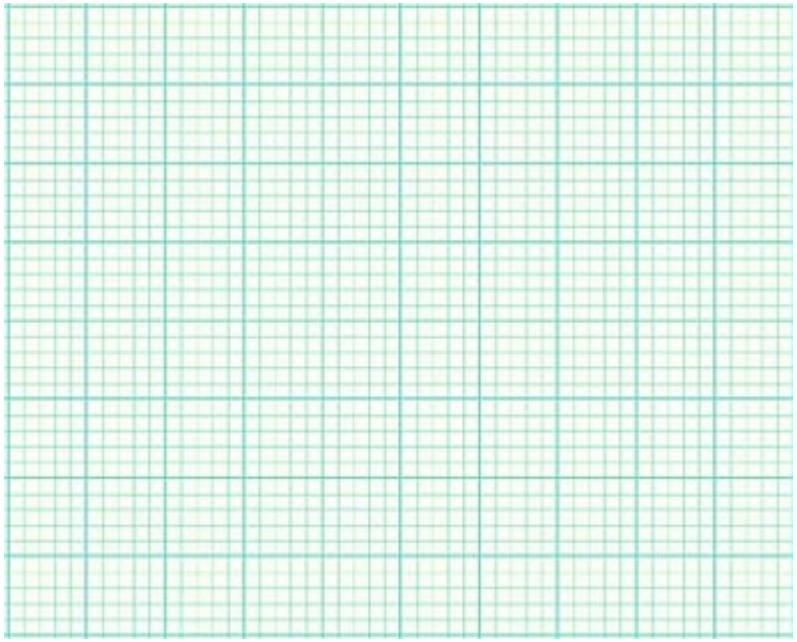

***Figure 6**: Plot of motor voltage.*

This large spike in the voltage can lead to transistor and possibly motor damage. We can protect these devices by placing a signal diode across each motor. We will learn more about diodes later which will help us understand how they work in this application.

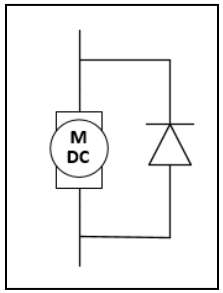

Place the diodes across the motor's leads as shown in the image on the right. Use your oscope to verify the spike has been suppressed.

Question 11: Sketch the suppressed waveform on the figure above as well.

If you reverse the polarity of Channel 2 (that is, if you reverse the red and black probes of Channel 2 *only*), the motors will (nearly?) stop. Try this, but ***only for a few seconds at a time*** because the MOSFETs will get ***very hot***. Why do the wheels stop? Think about this and it will be discussed in your breakout session.

Notes:

Mini-Project Modules

Mini-Project Modules provide students with options to investigate new concepts! As time allows, do one or more of the modules before returning to the laboratory's core procedure.

This week, we highly recommend the following ***Mini-Project modules:*** **The Voltage-Follower Buffer**

Mini-Project **Demystifying Ground (In development)**	***Mini-Project:*** **The Voltage-Follower Buffer**	***Mini-Project***

When instructed, return your borrowed equipment and clean up your benchtop. Again, save your MOSFET-based, motor-drive circuit on the breadboard in the locker with your car chassis.

Return to the breakout session when instructed by the TA.

Breakout Discussion Session

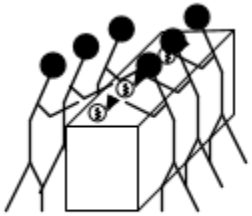

Collaborate.
Many circuits.

Adjust your cars and race through a straight-line obstacle course.

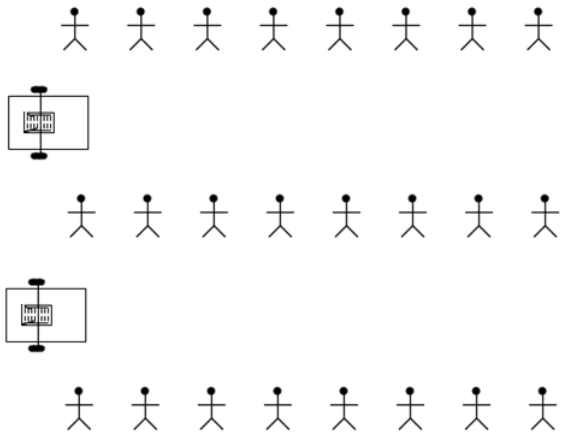

***Figure 7**: Head-to-head car race using the oscillator-**pulsed**-motor-drive circuits.*

When every group has raced (only once), meet in groups of 8 students to answer the summary questions.

Notes:

Notes:

Lab 5 Summary

Question 12: *Think about it* and discuss: How do clocks, smartphones, etc. synchronize their times all over the world?

Question 13: Why does reversing the oscilloscope probe result in both wheels stalling (refer to Figure 5). HINT: All of the oscilloscope's black probes are connected internal to the scope.

Question 14: In a future lab, we will learn how to change the duty cycle of our own square-wave oscillator. Considering the function of the square wave signal in this lab, what advantage(s) might that provide?