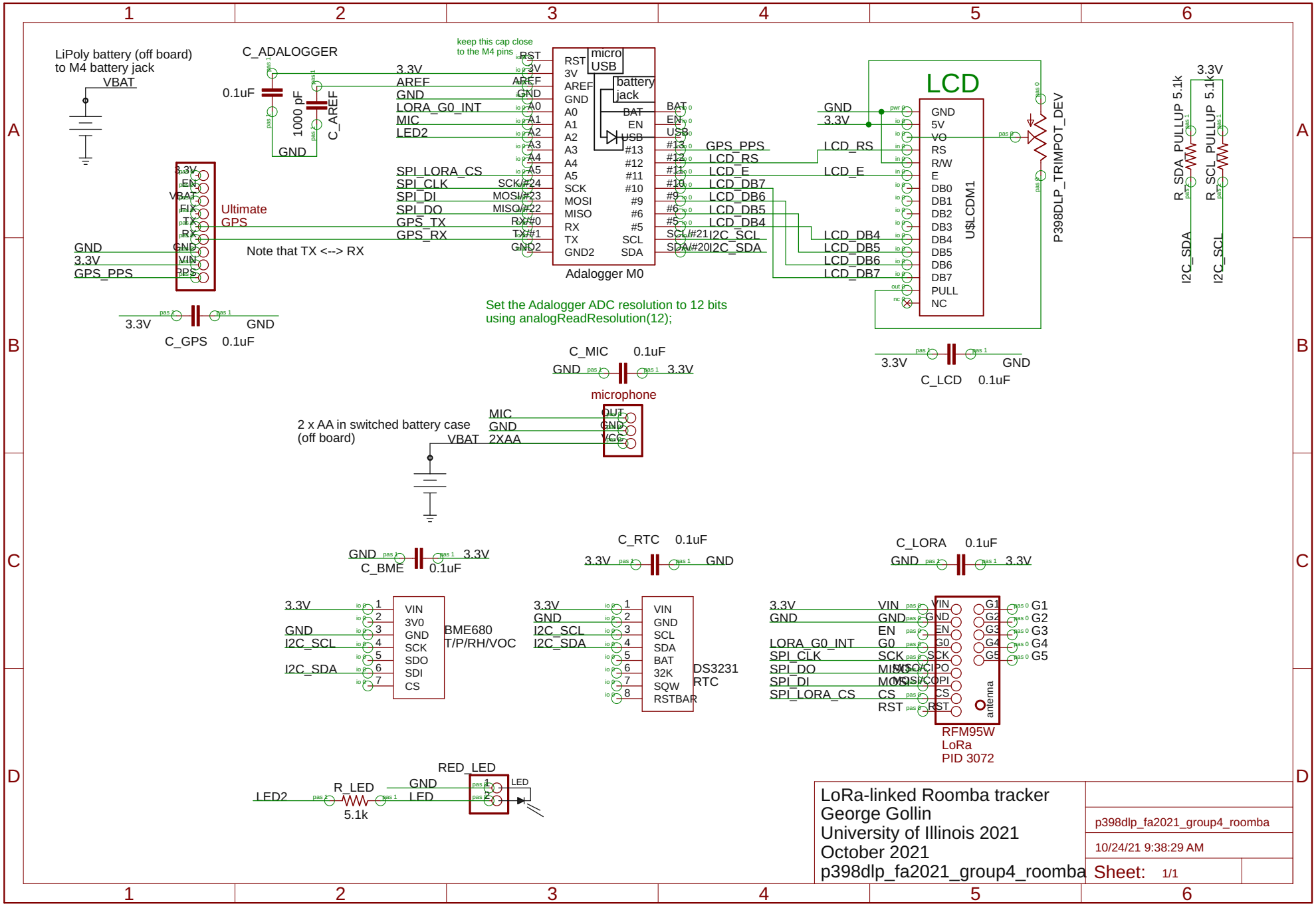
LiPoly battery (off board)
to M4 battery jack
VBAT
C_ADALOGGER
0.1uF
1000 pF
C_AREF
GND
keep this cap close
to the M4 pins
3.3V
AREF
GND
LORA_G0_INT
MIC
LED2
SPI_LORA_CS
SPI_CLK
SPI_DI
SPI_DO
GPS_TX
GPS_RX
RST
3V
AREF
GND
A0
A1
A2
A3
A4
A5
SCK
MOSI
MISO
RX
TX
GND2
SCK/#24
MOSI/#23
MISO/#22
RX/#0
TX/#1
GND2
micro
USB
battery
jack
BAT
EN
USB
#13
#12
#11
#10
#9
#6
#5
SCL/#21
SDA/#20
SCL
SDA
Adalogger M0
GPS_PPS
LCD_RS
LCD_E
LCD_DB7
LCD_DB6
LCD_DB5
LCD_DB4
I2C_SCL
I2C_SDA
LCD
GND
5V
VO
RS
R/W
E
DB0
DB1
DB2
DB3
DB4
DB5
DB6
DB7
PULL
NC
USLCDM1
P398DLP_TRIMPOT_DEV
R_SDA_PULLUP 5.1k
R_SCL_PULLUP 5.1k
Ultimate
GPS
Note that TX <--> RX
3.3V
EN
VBAT
FIX
TX
RX
GND
VIN
PPS
C_GPS 0.1uF
Set the Adalogger ADC resolution to 12 bits
using analogReadResolution(12);
C_LCD 0.1uF
C_MIC 0.1uF
microphone
OUT
VCC
2 x AA in switched battery case
(off board)
MIC
2XAA
C_BME 0.1uF
C_RTC 0.1uF
C_LORA 0.1uF
VIN
3V0
SCK
SDO
SDI
CS
BME680
T/P/RH/VOC
SCL
SDA
BAT
32K
SQW
RSTBAR
DS3231
RTC
G0
G1
G2
G3
G4
G5
MISO/CIPO
MOSI/COPI
antenna
RFM95W
LoRa
PID 3072
RED_LED
R_LED
5.1k
LED
LoRa-linked Roomba tracker
George Gollin
University of Illinois 2021
October 2021
p398dlp_fa2021_group4_roomba
p398dlp_fa2021_group4_roomba
10/24/21 9:38:29 AM
Sheet: 1/1