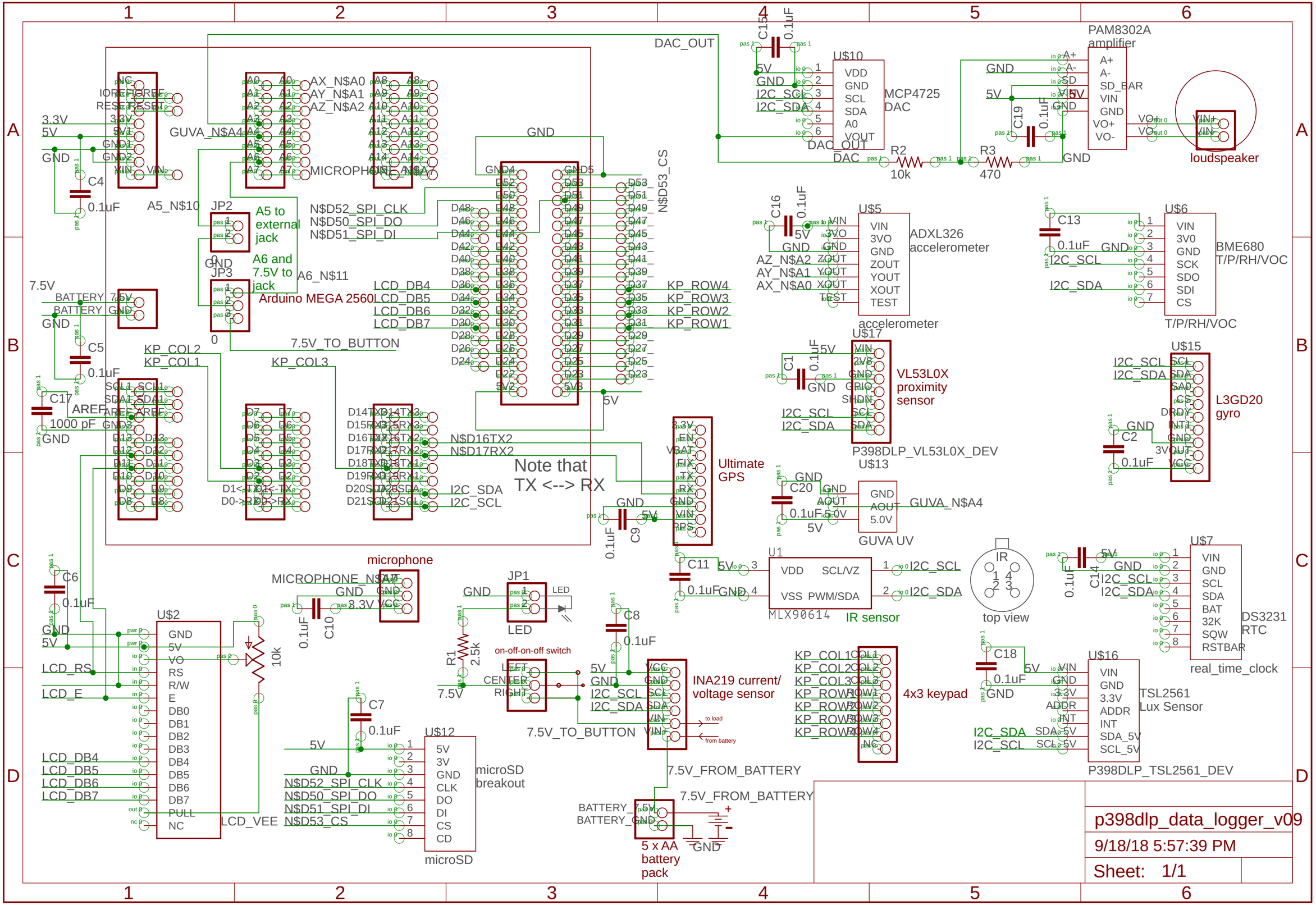
Arduino MEGA 2560
A5 to external jack
A6 and 7.5V to jack
MICROPHONE_N$A7
AX_N$A0
AY_N$A1
AZ_N$A2
GUVA_N$A4
A5_N$10
A6_N$11
N$D52_SPI_CLK
N$D50_SPI_DO
N$D51_SPI_DI
N$D53_CS
LCD_DB4
LCD_DB5
LCD_DB6
LCD_DB7
KP_ROW4
KP_ROW3
KP_ROW2
KP_ROW1
KP_COL2
KP_COL1
KP_COL3
7.5V_TO_BUTTON
N$D16TX2
N$D17RX2
I2C_SDA
I2C_SCL
Note that TX <--> RX
DAC_OUT
U$10
MCP4725 DAC
PAM8302A amplifier
loudspeaker
R2 10k
R3 470
C16 0.1uF
U$5
ADXL326 accelerometer
U$6
BME680 T/P/RH/VOC
U$17
VL53L0X proximity sensor
P398DLP_VL53L0X_DEV
U$13
U$15
L3GD20 gyro
Ultimate GPS
C20 0.1uF
GUVA UV
microphone
JP1
LED
U1
MLX90614
IR sensor
top view
U$7
DS3231 RTC
real_time_clock
U$2
LCD_VEE
10k
on-off-on-off switch
R1 2.5k
INA219 current/ voltage sensor
to load
from battery
7.5V_FROM_BATTERY
4x3 keypad
U$16
TSL2561 Lux Sensor
P398DLP_TSL2561_DEV
U$12
microSD breakout
microSD
5 x AA battery pack
p398dlp_data_logger_v09
9/18/18 5:57:39 PM
Sheet: 1/1