Straight-Run Car with Speed Control

Learning Objectives

- Apply multiple techniques to build a car with a knob to make it track in a straight line and another knob to control its overall speed.

Prerequisites

You should have completed the MOSFET-based Logical AND exercise which explains the operation of the two-nMOS logical-AND circuit of Figure 1b. In this design, the motor only runs when the inputs at each of the nMOS gate terminals are “high”.

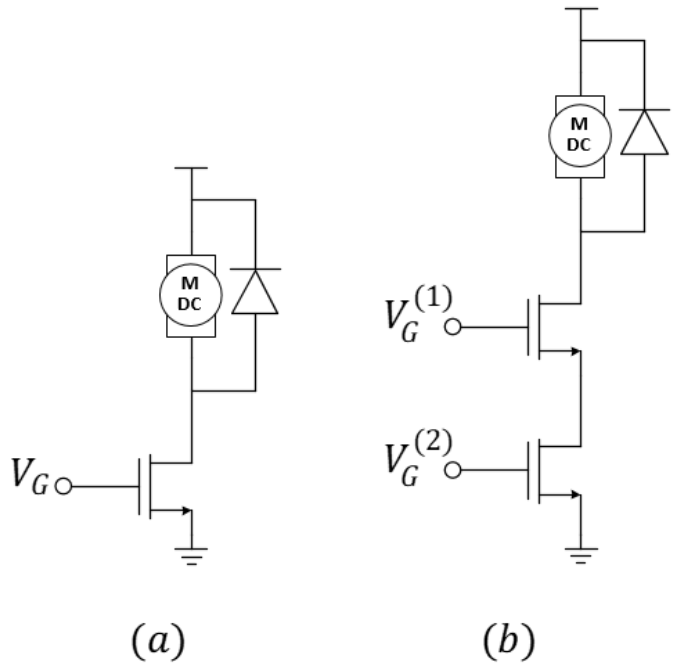

***Figure 1**: (a) nMOS motor-drive circuit and (b) a two-nMOS logical-AND circuit for “joining” two PWM signals.*

Notes:

Once we have the basic structure of a nMOS-based logical AND motor drive circuit, we can think of multiple uses. For instance, suppose we have a car that turns slightly to the right because the left wheel runs slightly faster than the left. We could use a PWM signal and its "inverse" to slow the left wheel and speed the right wheel to make the car run straight using the traditional single-nMOS motor drive for each wheel. If we also find that we want to slow down both motors, we could generate another PWM signal fed into a second nMOS transistor on each wheel and reduce the duty cycle to slow both wheels simultaneously. To ensure that the two PWM signals work together, we should use two very-different frequencies for each. This is demonstrated in Figure 2 for one of the wheels showing the PWM signal for the speed control to be a factor of 8 times larger than the frequency of the PWM used for wheel balance.

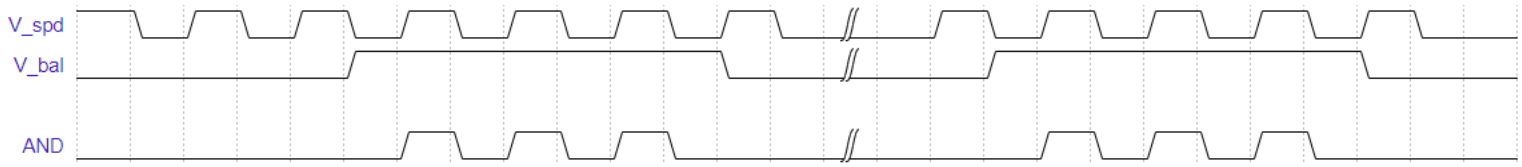

***Figure 2**: Example: Increasing the duty cycle of either V_{bal} or V_{spd} will change the output of the AND to drive the corresponding wheel at a higher speed allowing either input to achieve its intended purpose.*

Procedure

This design is for an advanced motor-control circuit and not just for simple push-button inputs. Consider Figure 3 that includes an adjustable wheel-speed balance potentiometer combined with speed control. You should recognize the familiar motor-drive circuits as well as two oscillators and two copies of the logical AND. This idea should open a wealth of potential robotics projects! Build it now.

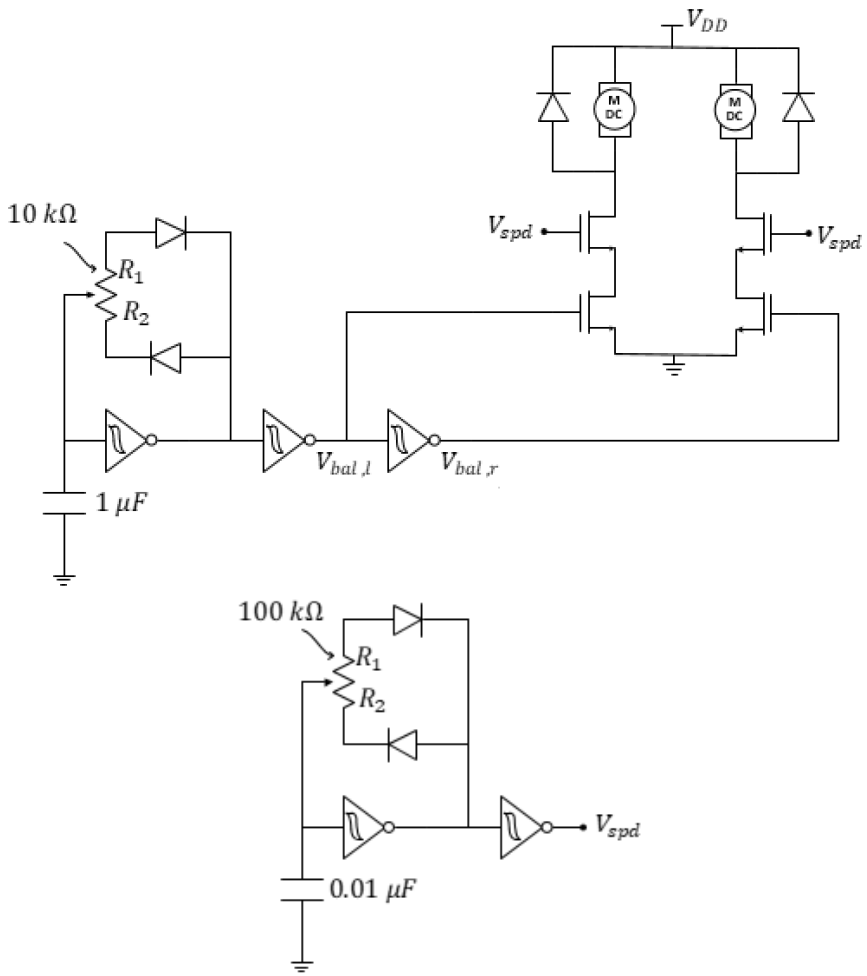

Figure 3: *PWM-based wheel balancer plus speed control. The speed control circuit is drawn separately for clarity but notice that the nodes labeled V_{spd} must all be connected.*

Notes:

Name:_____ UIN: | | | | | | | | | Section AB/BB: |

Notes:

Question 1: (**Team**) Explain what could fail if the speed control and the balance control were at the same frequency. Draw signals vs. time to explain. HINT: consider the special case where they are both at 50% duty cycle and think about different ways the signals may be aligned in time.

Question 2: (**Team**) Use a circuit schematic to explain how you could build a light-seeking car with speed control. Discuss your confidence or uncertainty in the design.

Question 3: (**Team**) Use a circuit schematic to explain how you could build a light-seeking car **with** speed control **and** compensation for manufacturing differences in motor speeds. Discuss your confidence or uncertainty in the design.

Question 4: (**Individual**) Submit an individual video demonstrating the operation of Figure 3. Use an oscilloscope in your demo to highlight some relationships between the signals of your choice.