Buttons and Switches and RC Time Constants

Switching a Circuit

Let's build a circuit that uses two buttons to turn on and off two light-emitting diodes (LEDs). Locate two push buttons from your kit, as well as two red LEDs and two 330 Ω resistors. These resistors will have the color bands "orange orange brown" plus a third band (likely gold) that indicates tolerance. You may use either 4 AA batteries or a 9-V battery for power. Be very careful not to short your battery when building the circuit. Be ESPECIALLY careful not to accidentally short your battery when storing or transporting your circuit.

Using these parts, we will construct the circuit illustrated in the circuit schematic of Figure 1 and clearly explained in the physical diagram of Figure 2. The proper insertion of the button into the breadboard is explained in Figure 3.

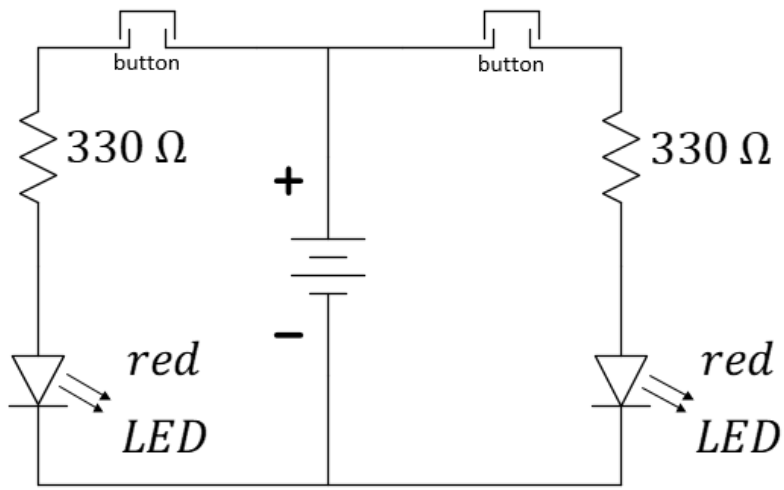

Figure 1: *Circuit schematic for switching LEDs.*

Notes:

How to read the resistor color code: http://en.wikipedia.org/wiki/Electronic_color_code

You will want to learn a good mnemonic like the one here: http://www.orcadxcc.org/resistor_color_codes.html or https://www.allaboutcircuits.com/tools/resistor-color-code-calculator/

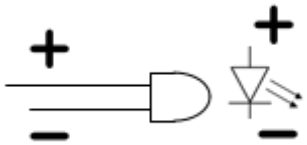

All diodes have an anode (top) and a cathode (bottom). If the LED is inserted in reverse, it will not illuminate as the voltage is increased.

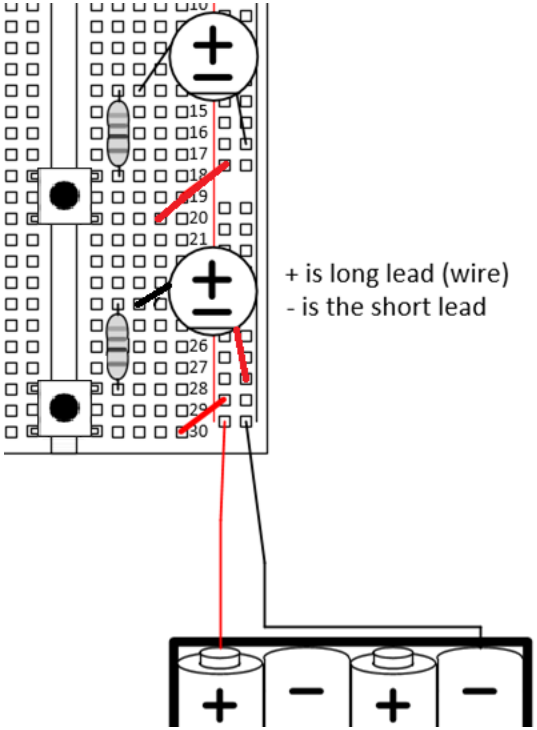

Figure 2: *Physical diagram for button-controlled motors. The barrel-to-wire adaptor will be needed.* The *4xAA battery pack may be replaced by your 9-V battery.*

Notes:

The LEDs of your kit have nice color!

A barrel-to-wire adaptor

Notes:

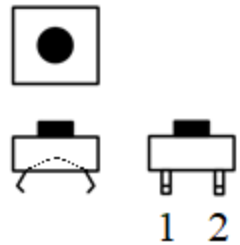

Figure 3: *Multi-view projection of the button. Two flat wires (labeled 1 and 2 above) will span the gap in the middle of your breadboard. These two wires are connected together by an internal metal plate when the button is pressed.*

Now, take apart that first circuit (the first portion is not graded) and build the circuit of Figure 4. Use $C = 1000\ \mu F$ for the capacitor, $R = 1\ k\Omega$ (brown/black/red/gold) for the resistor, and a *red-colored* LED. Be careful about the orientation of the buttons. Remember that the connection across the button should only be made when the button is pressed. If your LED remains lit with no buttons pressed, your orientation is likely wrong. If the LED will not light, check the polarity (direction) in which it is inserted.

Comment: Ordinarily, we would do this experiment using an oscilloscope to observe the voltage of the capacitor as it changes across time. In this case, we are skipping the oscilloscope and making some rough observations about the time constant using the visible evidence of current flow afforded by the LED. If you are inclined to play with the oscilloscope, please do!

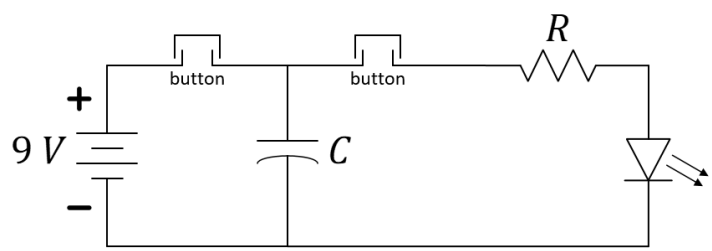

Figure 4: *Circuit schematic for examining a time constant without an oscilloscope.*

Name:_____ UIN: | | | | | | | | | Section AB/BB: |

Notes:

The following questions should be discussed as a team. One teammate will record the answers and enter a **team submission** on behalf of all participating team members.

Question 1: Explain, using your prior knowledge of time constants, $t_{rise} \approx 2.2 \times RC$, why the capacitor should charge very quickly when the button on the left of Figure 4 is pressed. Is C in the equation the same as C in Figure 4? Is R in the equation the same as R in Figure 4? Explain.

Question 2: Make a quick estimate how long the LED might remain lit when the rightmost button (only) is pressed. Base your guess on the time constant, $t_{fall} \approx 2.2 \times RC$. You need not consider any characteristics of the LED. Again, discuss the values of R and C with respect to the equation and Figure 4.

Notes:

Question 3: Press the leftmost button (see Figure 4) for about 1 second, then hold down the right button. Count how many seconds the LED remains visibly/perceivably illuminated. Repeat. Think about how this compares to the estimate of t_{fall}. What do you think accounts for the difference between t_{fall} and the count you just made?

Question 4: Add a second $1000\ \mu F$ capacitor in parallel to the first and repeat the process of Question 3. Capacitors in parallel will have an equivalent capacitance of the sum of the capacitance of each. Does your observation support this? Explain.

Do not disassemble your circuit yet! You need to produce a working video of it for individual post-lab submission.